Property Location 10 EAST WINTONBURY AVE | Map ID O12/ / 59/ / | Bldg Name | State Use 210
Vision ID 2020 | Account # R02072 | Bldg # 1 | Sec # 1 of 1 | Card # 1 of 19 | Print Date 12/17/2025 12:18:04

CURRENT OWNER

WINTONBURY OWNERS LLC
C/O PAREDIM PARTNERS LLC
45 KNOLLWOOD ROAD STE 305
ELMSFORD NY 10523

TOPO	UTILITIES	STRT / ROAD	LOCATION

SUPPLEMENTAL DATA

Alt Prcl ID 179-1 1-6
Census: 4715
Foundation POURED CONC.
Fire Dist: B
Condo Mdl
Unsold Co
GIS ID 2020

Reval Data
Callback Lt
Permit Dat
Assoc Pid#

CURRENT ASSESSMENT

Description	Code	Appraised	Assessed
Comm Land	2-1	5,550,000	3,885,000
Apartment	2-3	12,692,100	8,884,470
Comm OB	2-5	187,200	131,040
Total		18,429,300	12,900,510

6011
BLOOMFIELD, CT

VISION

RECORD OF OWNERSHIP

	BK-VOL/PAGE		SALE DATE	Q/U	V/I	SALE PRICE	VC
WINTONBURY OWNERS LLC	1153	0349	05-28-2004	U	I	7,650,000	34

PREVIOUS ASSESSMENTS (HISTORY)

Year	Code	Assessed	Year	Code	Assessed	Year	Code	Assessed
2024	2-1	3,885,000	2024	2-1	3,885,000	2023	2-1	2,913,750
	2-3	8,884,470		2-3	8,884,470		2-3	6,041,350
	2-5	117,180		2-5	117,180		2-5	86,170
	Total	12,886,650		Total	12,886,650		Total	9,041,270

EXEMPTIONS

Year	Code	Description	Amount
		Total	0.00

OTHER ASSESSMENTS

Code	Description	Number	Amount	Comm Int

This signature acknowledges a visit by a Data Collector or Assessor

ASSESSING NEIGHBORHOOD

Nbhd	Sub	Nbhd Name	B	Tracing	Batch
0001	A				

NOTES

2019 "WINDSOR CROSSING"
TM - UNITS 1,3,5,7,9,11 & 13
NEW ROOF 2017, NEW SIDING 2005 (ALL
UNITS EG

79 - 2 BD 1.5 BTH UNIS, 32 - 3 BD 1.5

BTH UNITS - 111 TOTAL
BLDG 1: (5) 2 BD 1.5 BTH
(2) 3 BD 1.5 BTH. INTERIORS WELL MAIN-
TAINED. 2019 - IA
2025- COOLING & ADD SINGLE HEAD LIGHTS

APPRAISED VALUE SUMMARY

Appraised Bldg. Value (Card)	12,692,100
Appraised Xf (B) Value (Bldg)	0
Appraised Ob (B) Value (Bldg)	187,200
Appraised Land Value (Bldg)	5,550,000
Special Land Value	0
Total Appraised Parcel Value	18,429,300
Valuation Method	C
Total Appraised Parcel Value	18,429,300

BUILDING PERMIT RECORD

Permit Id	Issue Date	Type	Description	Amount	Insp Date	% Comp	Date Comp	Comments
PP-24-242	01-02-2025	PL		300	06-20-2025	100		Pressure test the gas line, cap
MP-24-403	12-13-2024	HA	HVAC	1,750,000	06-20-2025	100		Installed LG heat pump syste
MP-24-24	01-25-2024	HA	HVAC	18,500	06-20-2025	100		Work performed at Windsor Cr
109245	06-30-2017			178,000		100		REROOFING 10 BLDGS
B21707	07-17-2002			2,600		100		

VISIT / CHANGE HISTORY

Date	Id	Type	Is	Cd	Purpost/Result
06-20-2025	VM			1B	Full Inspection Permit
12-06-2024	MF			40	Reval Hearing No Change
04-29-2024	MF			12	Field Review
06-10-2019	LS			00	Full Measure
10-05-2009	WT			4D	Interior Full Reval/Data Mai
09-29-2009	PJS			2D	Exterior Full Reval/Sale
09-15-2004	PR			LG	Lesher Glendenning

LAND LINE VALUATION SECTION

B	Use Code	Description	Zone	Land Type	Land Units		Unit Price	I. Factor	Site Index	Cond.	Nbhd.	Nhbd Adj	Notes	Location Adjustment		Adj Unit Pric	Land Value
1	210	Apartments	R-15		111	BL	50,000.00	1.00000	0	1.00		1.000	111 UNITS/ LOC		0		5,550,000
				Total Card Land Units	0.00	AC	Parcel Total Land Area:			14.90						Total Land Value	5,550,000

Property Location 10 EAST WINTONBURY AVE | Map ID O12/ / 59/ / | Bldg Name | State Use 210
Vision ID 2020 | Account # R02072 | Bldg # 1 | Sec # 1 of 1 | Card # 1 of 19 | Print Date 12/17/2025 12:18:05

CONSTRUCTION DETAIL

Element	Cd	Description
Style:	60	Apartments-Garden
Model	94	Commercial
Grade:	08	C
Stories:	2	2 Stories
Occupancy:	7.00	
Ext Wall A:	25	Vinyl Siding
Ext Wall B:		
Roof Struct:	03	Gable
Roof Cover:	03	Asphalt Shingl
Int Wall A:	05	Drywall
Int Wall B:		
Int Floor A:	14	Carpet
Int Floor B:		
Heating Fuel:	03	Gas
Heating Type:	05	Hot Water
AC Type:	100	
% Sprinkler:	0	
Bldg Use:	210	Apartments
Heat/AC:	00	None
Frame Type:	02	Wood Frame
Baths/Plumbing	02	Average
Ceiling/Walls:	06	Ceil & Wall
Rooms/Prtns:	02	Average
Wall Height:	8.00	
% Comn Wall:		
1st Floor Use:		

CONSTRUCTION DETAIL (CONTINUED)

Element	Cd	Description

MIXED USE

Code	Description	Percentage
210	Apartments	100
		0
		0

COST / MARKET VALUATION

RCN	1,740,408
Year Built	1973
Effective Year Built	
Depreciation Code	G
Remodel Rating	
Year Remodeled	
Depreciation %	35
Functional Obsol	
External Obsol	20
Trend Factor	1
Condition	
Condition %	
Percent Good	45
Cns Sect Rcnld	783,200
Dep % Ovr	
Dep Ovr Comment	
Misc Imp Ovr	
Misc Imp Ovr Comment	
Cost to Cure Ovr	
Cost to Cure Ovr Comment	

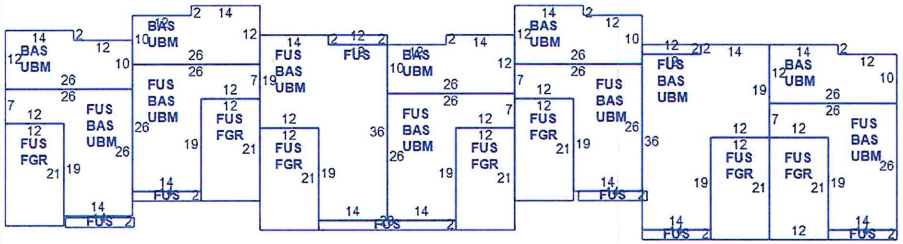

OB - OUTBUILDING & YARD ITEMS(L) / XF - BUILDING EXTRA FEATURES(B)

Code	Descripti	Sub	Sub Ty	L/B	Units	Unit Price	Yr Blt	Cond. Cd	% Gd	Grade	Grade Ad	Appr. V
PAV	Paving	A	Asphal	L	82,08	3.40	1973	5	60	3	1.00	167,400
LT1	Light Sin			L	18	1100.00			100		0.00	19,800

BUILDING SUB-AREA SUMMARY SECTION

Code	Description	Living Area	Floor Area	Eff Area	Unit Cost	Undeprec Value
BAS	First Floor	5,152	5,152	5,152	0	
FGR	Garage	0	1,764	706	0	
FUS	Finished Upper Story	5,720	5,720	5,720	0	
UBM	Basement	0	5,152	1,030	0	
	Ttl Gross Liv / Lease Area	10,872	17,788	12,608		

Property Location 10 EAST WINTONBURY AVE | Map ID O12/ / 59/ / | Bldg Name | State Use 210
Vision ID 2020 | Account # R02072 | Bldg # 2 | Sec # 1 of 1 | Card # 2 of 19 | Print Date 12/17/2025 12:18:05

CURRENT OWNER

WINTONBURY OWNERS LLC
C/O PAREDIM PARTNERS LLC
45 KNOLLWOOD ROAD STE 305
ELMSFORD NY 10523

TOPO / UTILITIES / STRT / ROAD / LOCATION

SUPPLEMENTAL DATA

Alt Prcl ID	179-1 1-6	Reval Data	
Census:	4715	Callback Lt	
Foundation	POURED CONC.	Permit Dat	
Fire Dist:	B		
Condo Mdl			
Unsold Co			
GIS ID	2020	Assoc Pid#	

CURRENT ASSESSMENT

Description	Code	Appraised	Assessed
Comm Land	2-1	5,550,000	3,885,000
Apartment	2-3	12,692,100	8,884,470
Comm OB	2-5	187,200	131,040
Total		18,429,300	12,900,510

6011
BLOOMFIELD, CT

VISION

RECORD OF OWNERSHIP

	BK-VOL/PAGE		SALE DATE	Q/U	V/I	SALE PRICE	VC
WINTONBURY OWNERS LLC	1153	0349	05-28-2004	U	I	7,650,000	34

PREVIOUS ASSESSMENTS (HISTORY)

Year	Code	Assessed	Year	Code	Assessed	Year	Code	Assessed
2024	2-1	3,885,000	2024	2-1	3,885,000	2023	2-1	2,913,750
	2-3	8,884,470		2-3	8,884,470		2-3	6,041,350
	2-5	117,180		2-5	117,180		2-5	86,170
	Total	12,886,650		Total	12,886,650		Total	9,041,270

EXEMPTIONS

Year	Code	Description	Amount
		Total	0.00

OTHER ASSESSMENTS

Code	Description	Number	Amount	Comm Int

This signature acknowledges a visit by a Data Collector or Assessor

ASSESSING NEIGHBORHOOD

Nbhd	Sub	Nbhd Name	B	Tracing	Batch
0001	A				

NOTES

SHED 6X10-NC; PARTIAL BASEMENT CEILING (2) 3 BD 1. BTH
20% FLOOR 20% AND PARTIALWALL 10%
BASEMENT USED AS STORAGE ONLY
2019 - UNITS 2,4,6,8,10,12 & 14
WALL UNIT A/C R04126A
BLDG 2: (5) 2 BD 1.5 BTH

APPRAISED VALUE SUMMARY

Appraised Bldg. Value (Card)	12,692,100
Appraised Xf (B) Value (Bldg)	0
Appraised Ob (B) Value (Bldg)	187,200
Appraised Land Value (Bldg)	5,550,000
Special Land Value	0
Total Appraised Parcel Value	18,429,300
Valuation Method	C
Total Appraised Parcel Value	18,429,300

BUILDING PERMIT RECORD

Permit Id	Issue Date	Type	Description	Amount	Insp Date	% Comp	Date Comp	Comments

VISIT / CHANGE HISTORY

Date	Id	Type	Is	Cd	Purpost/Result

LAND LINE VALUATION SECTION

B	Use Code	Description	Zone	Land Type	Land Units		Unit Price	I. Factor	Site Index	Cond.	Nbhd.	Nhbd Adj	Notes	Location Adjustment		Adj Unit Pric	Land Value
2	210	Apartments	R-15		0.000	AC	0.00	1.00000	0	1.00		1.000			0		0
				Total Card Land Units	0.00	AC	Parcel Total Land Area:			14.90						Total Land Value	5,550,000

Property Location 10 EAST WINTONBURY AVE | Map ID O12/ / 59/ / | Bldg Name | State Use 210
Vision ID 2020 | Account # R02072 | Bldg # 2 | Sec # 1 of 1 | Card # 2 of 19 | Print Date 12/17/2025 12:18:05

CONSTRUCTION DETAIL

Element	Cd	Description
Style:	60	Apartments-Garden
Model	94	Commercial
Grade:	08	C
Stories:	2	2 Stories
Occupancy:	7.00	
Ext Wall A:	25	Vinyl Siding
Ext Wall B:		
Roof Struct:	03	Gable
Roof Cover:	03	Asphalt Shingl
Int Wall A:	05	Drywall
Int Wall B:		
Int Floor A:	14	Carpet
Int Floor B:		
Heating Fuel:	03	Gas
Heating Type:	05	Hot Water
AC Type:	100	
% Sprinkler:	0	
Bldg Use:	210	Apartments
Heat/AC:	00	None
Frame Type:	02	Wood Frame
Baths/Plumbing	02	Average
Ceiling/Walls:	06	Ceil & Wall
Rooms/Prtns:	02	Average
Wall Height:	8.00	
% Comn Wall:		
1st Floor Use:		

CONSTRUCTION DETAIL (CONTINUED)

Element	Cd	Description

MIXED USE

Code	Description	Percentage
210	Apartments	100
		0
		0

COST / MARKET VALUATION

RCN	1,740,408
Year Built	1973
Effective Year Built	
Depreciation Code	G
Remodel Rating	
Year Remodeled	
Depreciation %	35
Functional Obsol	
External Obsol	20
Trend Factor	1
Condition	
Condition %	
Percent Good	45
Cns Sect Rcnld	783,200
Dep % Ovr	
Dep Ovr Comment	
Misc Imp Ovr	
Misc Imp Ovr Comment	
Cost to Cure Ovr	
Cost to Cure Ovr Comment	

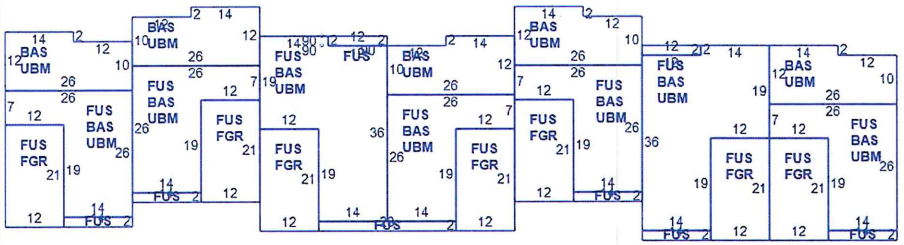

OB - OUTBUILDING & YARD ITEMS(L) / XF - BUILDING EXTRA FEATURES(B)

Code	Descripti	Sub	Sub Ty	L/B	Units	Unit Price	Yr Blt	Cond. Cd	% Gd	Grade	Grade Ad	Appr. V

BUILDING SUB-AREA SUMMARY SECTION

Code	Description	Living Area	Floor Area	Eff Area	Unit Cost	Undeprec Value
BAS	First Floor	5,152	5,152	5,152	0	
FGR	Garage	0	1,764	706	0	
FUS	Finished Upper Story	5,720	5,720	5,720	0	
UBM	Basement	0	5,152	1,030	0	
	Ttl Gross Liv / Lease Area	10,872	17,788	12,608		

Property Location 10 EAST WINTONBURY AVE | Map ID O12/ / 59/ / | Bldg Name | State Use 210
Vision ID 2020 | Account # R02072 | Bldg # 3 | Sec # 1 of 1 | Card # 3 of 19 | Print Date 12/17/2025 12:18:06

CURRENT OWNER	TOPO	UTILITIES	STRT / ROAD	LOCATION
WINTONBURY OWNERS LLC				
C/O PAREDIM PARTNERS LLC				
45 KNOLLWOOD ROAD STE 305				
ELMSFORD NY 10523				

SUPPLEMENTAL DATA

Alt Prcl ID	179-1 1-6	Reval Data	
Census:	4715	Callback Lt	
Foundation	POURED CONC.	Permit Dat	
Fire Dist:	B		
Condo Mdl			
Unsold Co			
GIS ID	2020	Assoc Pid#	

CURRENT ASSESSMENT

Description	Code	Appraised	Assessed
Comm Land	2-1	5,550,000	3,885,000
Apartment	2-3	12,692,100	8,884,470
Comm OB	2-5	187,200	131,040
Total		18,429,300	12,900,510

6011

BLOOMFIELD, CT

VISION

RECORD OF OWNERSHIP

	BK-VOL/PAGE		SALE DATE	Q/U	V/I	SALE PRICE	VC
WINTONBURY OWNERS LLC	1153	0349	05-28-2004	U	I	7,650,000	34

PREVIOUS ASSESSMENTS (HISTORY)

Year	Code	Assessed	Year	Code	Assessed	Year	Code	Assessed
2024	2-1	3,885,000	2024	2-1	3,885,000	2023	2-1	2,913,750
	2-3	8,884,470		2-3	8,884,470		2-3	6,041,350
	2-5	117,180		2-5	117,180		2-5	86,170
	Total	12,886,650		Total	12,886,650		Total	9,041,270

EXEMPTIONS

Year	Code	Description	Amount
		Total	0.00

OTHER ASSESSMENTS

Code	Description	Number	Amount	Comm Int

This signature acknowledges a visit by a Data Collector or Assessor

ASSESSING NEIGHBORHOOD

Nbhd	Sub	Nbhd Name	B	Tracing	Batch
0001	A				

NOTES

2019 TH - UNITS 16,18.20,22,24 & 28
WALL A/C - UEP = STAIRS TO UBM
BLDG 3: (5) 2 BD 1.5 BTH
(2) 3 BD 1.5 BTH

R04126B

APPRAISED VALUE SUMMARY

Appraised Bldg. Value (Card)	12,692,100
Appraised Xf (B) Value (Bldg)	0
Appraised Ob (B) Value (Bldg)	187,200
Appraised Land Value (Bldg)	5,550,000
Special Land Value	0
Total Appraised Parcel Value	18,429,300
Valuation Method	C
Total Appraised Parcel Value	18,429,300

BUILDING PERMIT RECORD

Permit Id	Issue Date	Type	Description	Amount	Insp Date	% Comp	Date Comp	Comments

VISIT / CHANGE HISTORY

Date	Id	Type	Is	Cd	Purpost/Result

LAND LINE VALUATION SECTION

B	Use Code	Description	Zone	Land Type	Land Units		Unit Price	I. Factor	Site Index	Cond.	Nbhd.	Nhbd Adj	Notes	Location Adjustment		Adj Unit Pric	Land Value
3	210	Apartments	R-15		0.000	AC	0.00	1.00000	0	1.00		1.000			0		0
				Total Card Land Units	0.00	AC	Parcel Total Land Area:			14.90						Total Land Value	5,550,000

Property Location 10 EAST WINTONBURY AVE | Map ID O12/ / 59/ / | Bldg Name | State Use 210
Vision ID 2020 | Account # R02072 | Bldg # 3 | Sec # 1 of 1 | Card # 3 of 19 | Print Date 12/17/2025 12:18:06

CONSTRUCTION DETAIL

Element	Cd	Description
Style:	60	Apartments-Garden
Model	94	Commercial
Grade:	08	C
Stories:	2	2 Stories
Occupancy:	7.00	
Ext Wall A:	25	Vinyl Siding
Ext Wall B:		
Roof Struct:	03	Gable
Roof Cover:	03	Asphalt Shingl
Int Wall A:	05	Drywall
Int Wall B:		
Int Floor A:	14	Carpet
Int Floor B:		
Heating Fuel:	03	Gas
Heating Type:	05	Hot Water
AC Type:	100	
% Sprinkler:	0	
Bldg Use:	210	Apartments
Heat/AC:	00	None
Frame Type:	02	Wood Frame
Baths/Plumbing	02	Average
Ceiling/Walls:	06	Ceil & Wall
Rooms/Prtns:	02	Average
Wall Height:	8.00	
% Comn Wall:		
1st Floor Use:		

CONSTRUCTION DETAIL (CONTINUED)

Element	Cd	Description

MIXED USE

Code	Description	Percentage
210	Apartments	100
		0
		0

COST / MARKET VALUATION

RCN	1,739,706
Year Built	1973
Effective Year Built	
Depreciation Code	G
Remodel Rating	
Year Remodeled	
Depreciation %	35
Functional Obsol	
External Obsol	20
Trend Factor	1
Condition	
Condition %	
Percent Good	45
Cns Sect Rcnld	782,900
Dep % Ovr	
Dep Ovr Comment	
Misc Imp Ovr	
Misc Imp Ovr Comment	
Cost to Cure Ovr	
Cost to Cure Ovr Comment	

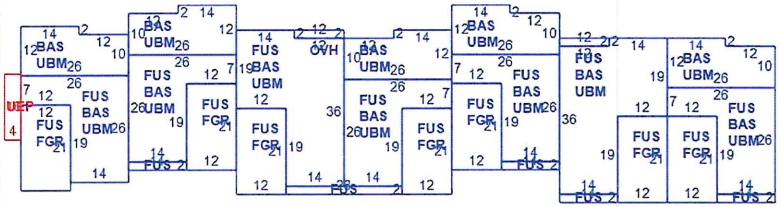

OB - OUTBUILDING & YARD ITEMS(L) / XF - BUILDING EXTRA FEATURES(B)

Code	Descripti	Sub	Sub Ty	L/B	Units	Unit Price	Yr Blt	Cond. Cd	% Gd	Grade	Grade Ad	Appr. V

BUILDING SUB-AREA SUMMARY SECTION

Code	Description	Living Area	Floor Area	Eff Area	Unit Cost	Undeprec Value
BAS	First Floor	5,152	5,152	5,152	0	
FGR	Garage	0	1,764	706	0	
FUS	Finished Upper Story	5,668	5,668	5,668	0	
OVH	Overhang	24	24	24	0	
UBM	Basement	0	5,152	1,030	0	
UEP	Unfinished Enclosed Porch	0	64	22	0	
	Ttl Gross Liv / Lease Area	10,844	17,824	12,602		

Property Location 10 EAST WINTONBURY AVE | Map ID O12/ / 59/ / | Bldg Name | State Use 210
Vision ID 2020 | Account # R02072 | Bldg # 4 | Sec # 1 of 1 | Card # 4 of 19 | Print Date 12/17/2025 12:18:06

CURRENT OWNER

WINTONBURY OWNERS LLC
C/O PAREDIM PARTNERS LLC
45 KNOLLWOOD ROAD STE 305
ELMSFORD NY 10523

TOPO	UTILITIES	STRT / ROAD	LOCATION

SUPPLEMENTAL DATA

Alt Prcl ID	179-1 1-6	Reval Data	
Census:	4715	Callback Lt	
Foundation	POURED CONC.	Permit Dat	
Fire Dist:	B		
Condo Mdl			
Unsold Co			
GIS ID	2020	Assoc Pid#	

CURRENT ASSESSMENT

Description	Code	Appraised	Assessed
Comm Land	2-1	5,550,000	3,885,000
Apartment	2-3	12,692,100	8,884,470
Comm OB	2-5	187,200	131,040
Total		18,429,300	12,900,510

6011

BLOOMFIELD, CT

VISION

RECORD OF OWNERSHIP

	BK-VOL/PAGE		SALE DATE	Q/U	V/I	SALE PRICE	VC
WINTONBURY OWNERS LLC	1153	0349	05-28-2004	U	I	7,650,000	34

PREVIOUS ASSESSMENTS (HISTORY)

Year	Code	Assessed	Year	Code	Assessed	Year	Code	Assessed
2024	2-1	3,885,000	2024	2-1	3,885,000	2023	2-1	2,913,750
	2-3	8,884,470		2-3	8,884,470		2-3	6,041,350
	2-5	117,180		2-5	117,180		2-5	86,170
	Total	12,886,650		Total	12,886,650		Total	9,041,270

EXEMPTIONS

Year	Code	Description	Amount
		Total	0.00

OTHER ASSESSMENTS

Code	Description	Number	Amount	Comm Int

This signature acknowledges a visit by a Data Collector or Assessor

ASSESSING NEIGHBORHOOD

Nbhd	Sub	Nbhd Name	B	Tracing	Batch
0001	A				

APPRAISED VALUE SUMMARY

Appraised Bldg. Value (Card)	12,692,100
Appraised Xf (B) Value (Bldg)	0
Appraised Ob (B) Value (Bldg)	187,200
Appraised Land Value (Bldg)	5,550,000
Special Land Value	0
Total Appraised Parcel Value	18,429,300
Valuation Method	C
Total Appraised Parcel Value	18,429,300

NOTES

2019 - UNITS 15,17,19, & 21
WALL UNIT A/C
BLDG 4: (1) 2 BD 1.5 BTH
(3) 3 BDB 1.5 BTH

R04126C

BUILDING PERMIT RECORD

Permit Id	Issue Date	Type	Description	Amount	Insp Date	% Comp	Date Comp	Comments

VISIT / CHANGE HISTORY

Date	Id	Type	Is	Cd	Purpost/Result

LAND LINE VALUATION SECTION

B	Use Code	Description	Zone	Land Type	Land Units		Unit Price	I. Factor	Site Index	Cond.	Nbhd.	Nhbd Adj	Notes	Location Adjustment		Adj Unit Pric	Land Value
4	210	Apartments	R-15		0.000	AC	0.00	1.00000	0	1.00		1.000			0		0
				Total Card Land Units	0.00	AC	Parcel Total Land Area:			14.90						Total Land Value	5,550,000

Property Location 10 EAST WINTONBURY AVE | Map ID O12/ / 59/ / | Bldg Name | State Use 210
Vision ID 2020 | Account # R02072 | Bldg # 4 | Sec # 1 of 1 | Card # 4 of 19 | Print Date 12/17/2025 12:18:07

CONSTRUCTION DETAIL

Element	Cd	Description
Style:	60	Apartments-Garden
Model	94	Commercial
Grade:	08	C
Stories:	2	2 Stories
Occupancy:	4.00	
Ext Wall A:	25	Vinyl Siding
Ext Wall B:		
Roof Struct:	03	Gable
Roof Cover:	03	Asphalt Shingl
Int Wall A:	05	Drywall
Int Wall B:		
Int Floor A:	14	Carpet
Int Floor B:		
Heating Fuel:	03	Gas
Heating Type:	05	Hot Water
AC Type:	100	
% Sprinkler:	0	
Bldg Use:	210	Apartments
Heat/AC:	00	None
Frame Type:	02	Wood Frame
Baths/Plumbing	02	Average
Ceiling/Walls:	06	Ceil & Wall
Rooms/Prtns:	02	Average
Wall Height:	8.00	
% Comn Wall:		
1st Floor Use:		

CONSTRUCTION DETAIL (CONTINUED)

Element	Cd	Description

MIXED USE

Code	Description	Percentage
210	Apartments	100
		0
		0

COST / MARKET VALUATION

RCN	1,118,686
Year Built	1973
Effective Year Built	
Depreciation Code	G
Remodel Rating	
Year Remodeled	
Depreciation %	35
Functional Obsol	
External Obsol	20
Trend Factor	1
Condition	
Condition %	
Percent Good	45
Cns Sect Rcnld	503,400
Dep % Ovr	
Dep Ovr Comment	
Misc Imp Ovr	
Misc Imp Ovr Comment	
Cost to Cure Ovr	
Cost to Cure Ovr Comment	

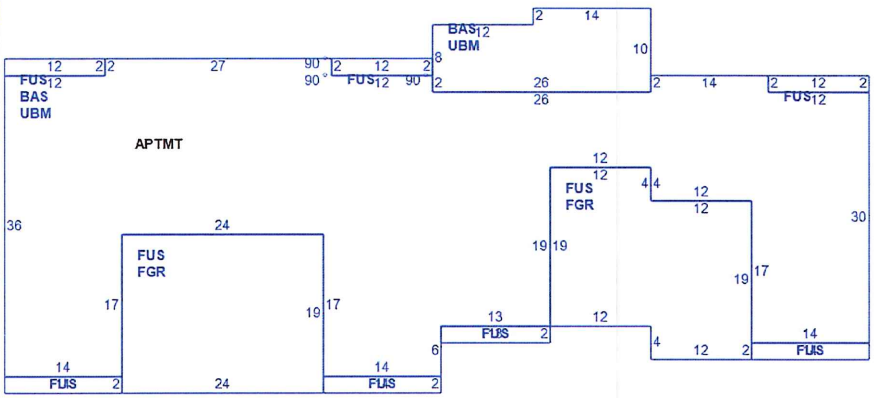

OB - OUTBUILDING & YARD ITEMS(L) / XF - BUILDING EXTRA FEATURES(B)

Code	Descripti	Sub	Sub Ty	L/B	Units	Unit Price	Yr Blt	Cond. Cd	% Gd	Grade	Grade Ad	Appr. V

BUILDING SUB-AREA SUMMARY SECTION

Code	Description	Living Area	Floor Area	Eff Area	Unit Cost	Undeprec Value
BAS	First Floor	2,828	2,828	2,828	0	
FGR	Garage	0	912	365	0	
FUS	Finished Upper Story	3,686	3,686	3,686	0	
UBM	Basement	0	2,828	566	0	
	Ttl Gross Liv / Lease Area	6,514	10,254	7,445		

Property Location 10 EAST WINTONBURY AVE | Map ID O12/ / 59/ / | Bldg Name | State Use 210
Vision ID 2020 | Account # R02072 | Bldg # 5 | Sec # 1 of 1 | Card # 5 of 19 | Print Date 12/17/2025 12:18:07

CURRENT OWNER

WINTONBURY OWNERS LLC
C/O PAREDIM PARTNERS LLC
45 KNOLLWOOD ROAD STE 305
ELMSFORD NY 10523

TOPO / UTILITIES / STRT / ROAD / LOCATION

SUPPLEMENTAL DATA

Alt Prcl ID	179-1 1-6	Reval Data	
Census:	4715	Callback Lt	
Foundation	POURED CONC.	Permit Dat	
Fire Dist:	B		
Condo Mdl			
Unsold Co			
GIS ID	2020	Assoc Pid#	

CURRENT ASSESSMENT

Description	Code	Appraised	Assessed
Comm Land	2-1	5,550,000	3,885,000
Apartment	2-3	12,692,100	8,884,470
Comm OB	2-5	187,200	131,040
Total		18,429,300	12,900,510

6011

BLOOMFIELD, CT

VISION

RECORD OF OWNERSHIP

	BK-VOL/PAGE		SALE DATE	Q/U	V/I	SALE PRICE	VC
WINTONBURY OWNERS LLC	1153	0349	05-28-2004	U	I	7,650,000	34

PREVIOUS ASSESSMENTS (HISTORY)

Year	Code	Assessed	Year	Code	Assessed	Year	Code	Assessed
2024	2-1	3,885,000	2024	2-1	3,885,000	2023	2-1	2,913,750
	2-3	8,884,470		2-3	8,884,470		2-3	6,041,350
	2-5	117,180		2-5	117,180		2-5	86,170
	Total	12,886,650		Total	12,886,650		Total	9,041,270

EXEMPTIONS

Year	Code	Description	Amount
		Total	0.00

OTHER ASSESSMENTS

Code	Description	Number	Amount	Comm Int

This signature acknowledges a visit by a Data Collector or Assessor

ASSESSING NEIGHBORHOOD

Nbhd	Sub	Nbhd Name	B	Tracing	Batch
0001	A				

NOTES

2019 - UNIT 23,25,27,29,31,33,35
WALL UNIT A/C
NEW ROOF 2017
BLDG 5: (5) 2 BD 1.5 BTH
(2) 3 BD 1.5 BTH R04126D

APPRAISED VALUE SUMMARY

Appraised Bldg. Value (Card)	12,692,100
Appraised Xf (B) Value (Bldg)	0
Appraised Ob (B) Value (Bldg)	187,200
Appraised Land Value (Bldg)	5,550,000
Special Land Value	0
Total Appraised Parcel Value	18,429,300
Valuation Method	C
Total Appraised Parcel Value	18,429,300

BUILDING PERMIT RECORD

Permit Id	Issue Date	Type	Description	Amount	Insp Date	% Comp	Date Comp	Comments

VISIT / CHANGE HISTORY

Date	Id	Type	Is	Cd	Purpost/Result

LAND LINE VALUATION SECTION

B	Use Code	Description	Zone	Land Type	Land Units		Unit Price	I. Factor	Site Index	Cond.	Nbhd.	Nhbd Adj	Notes	Location Adjustment		Adj Unit Pric	Land Value
5	210	Apartments	R-15		0.000	AC	0.00	1.00000	0	1.00		1.000			0		0
				Total Card Land Units	0.00	AC	Parcel Total Land Area:			14.90						Total Land Value	5,550,000

Property Location 10 EAST WINTONBURY AVE | Map ID O12/ / 59/ / | Bldg Name | State Use 210
Vision ID 2020 | Account # R02072 | Bldg # 5 | Sec # 1 of 1 | Card # 5 of 19 | Print Date 12/17/2025 12:18:07

CONSTRUCTION DETAIL

Element	Cd	Description
Style:	60	Apartments-Garden
Model	94	Commercial
Grade:	08	C
Stories:	2	2 Stories
Occupancy:	1.00	
Ext Wall A:	25	Vinyl Siding
Ext Wall B:		
Roof Struct:	03	Gable
Roof Cover:	12	Arch Shingles
Int Wall A:	05	Drywall
Int Wall B:		
Int Floor A:	14	Carpet
Int Floor B:		
Heating Fuel:	03	Gas
Heating Type:	05	Hot Water
AC Type:	100	
% Sprinkler:	0	
Bldg Use:	210	Apartments
Heat/AC:	00	None
Frame Type:	02	Wood Frame
Baths/Plumbing	02	Average
Ceiling/Walls:	06	Ceil & Wall
Rooms/Prtns:	02	Average
Wall Height:	8.00	
% Comn Wall:		
1st Floor Use:		

CONSTRUCTION DETAIL (CONTINUED)

Element	Cd	Description

MIXED USE

Code	Description	Percentage
210	Apartments	100
		0
		0

COST / MARKET VALUATION

RCN	1,742,940
Year Built	1973
Effective Year Built	
Depreciation Code	G
Remodel Rating	
Year Remodeled	
Depreciation %	35
Functional Obsol	
External Obsol	20
Trend Factor	1
Condition	
Condition %	
Percent Good	45
Cns Sect Rcnld	784,300
Dep % Ovr	
Dep Ovr Comment	
Misc Imp Ovr	
Misc Imp Ovr Comment	
Cost to Cure Ovr	
Cost to Cure Ovr Comment	

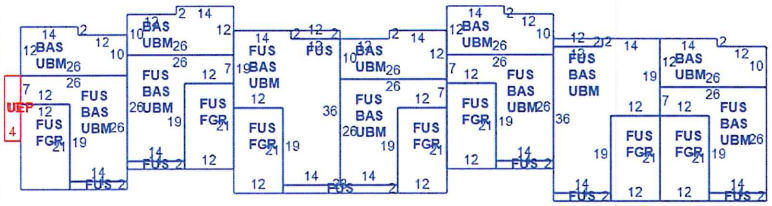

OB - OUTBUILDING & YARD ITEMS(L) / XF - BUILDING EXTRA FEATURES(B)

Code	Descripti	Sub	Sub Ty	L/B	Units	Unit Price	Yr Blt	Cond. Cd	% Gd	Grade	Grade Ad	Appr. V

BUILDING SUB-AREA SUMMARY SECTION

Code	Description	Living Area	Floor Area	Eff Area	Unit Cost	Undeprec Value
BAS	First Floor	5,152	5,152	5,152	0	
FGR	Garage	0	1,764	706	0	
FUS	Finished Upper Story	5,720	5,720	5,720	0	
UBM	Basement	0	5,152	1,030	0	
UEP	Unfinished Enclosed Porch	0	64	22	0	
	Ttl Gross Liv / Lease Area	10,872	17,852	12,630		

Property Location 10 EAST WINTONBURY AVE | Map ID O12/ / 59/ / | Bldg Name | State Use 210
Vision ID 2020 | Account # R02072 | Bldg # 6 | Sec # 1 of 1 | Card # 6 of 19 | Print Date 12/17/2025 12:18:08

CURRENT OWNER	TOPO	UTILITIES	STRT / ROAD	LOCATION
WINTONBURY OWNERS LLC C/O PAREDIM PARTNERS LLC 45 KNOLLWOOD ROAD STE 305 ELMSFORD NY 10523				

SUPPLEMENTAL DATA

Alt Prcl ID	179-1 1-6	Reval Data	
Census:	4715	Callback Lt	
Foundation	POURED CONC.	Permit Dat	
Fire Dist:	B		
Condo Mdl			
Unsold Co			
GIS ID	2020	Assoc Pid#	

CURRENT ASSESSMENT

Description	Code	Appraised	Assessed
Comm Land	2-1	5,550,000	3,885,000
Apartment	2-3	12,692,100	8,884,470
Comm OB	2-5	187,200	131,040
Total		18,429,300	12,900,510

6011

BLOOMFIELD, CT

VISION

RECORD OF OWNERSHIP

	BK-VOL/PAGE		SALE DATE	Q/U	V/I	SALE PRICE	VC
WINTONBURY OWNERS LLC	1153	0349	05-28-2004	U	I	7,650,000	34

PREVIOUS ASSESSMENTS (HISTORY)

Year	Code	Assessed	Year	Code	Assessed	Year	Code	Assessed
2024	2-1	3,885,000	2024	2-1	3,885,000	2023	2-1	2,913,750
	2-3	8,884,470		2-3	8,884,470		2-3	6,041,350
	2-5	117,180		2-5	117,180		2-5	86,170
	Total	12,886,650		Total	12,886,650		Total	9,041,270

EXEMPTIONS

Year	Code	Description	Amount
		Total	0.00

OTHER ASSESSMENTS

Code	Description	Number	Amount	Comm Int

This signature acknowledges a visit by a Data Collector or Assessor

ASSESSING NEIGHBORHOOD

Nbhd	Sub	Nbhd Name	B	Tracing	Batch
0001	A				

NOTES

2019 - UNITS 30,32,34,36, & 38
WALL UNIT A/C
BLDG 6: (4) 2 BD 1.5 BTH
(1) 3 BD 1.5 BTH

R04126E

APPRAISED VALUE SUMMARY

Appraised Bldg. Value (Card)	12,692,100
Appraised Xf (B) Value (Bldg)	0
Appraised Ob (B) Value (Bldg)	187,200
Appraised Land Value (Bldg)	5,550,000
Special Land Value	0
Total Appraised Parcel Value	18,429,300
Valuation Method	C
Total Appraised Parcel Value	18,429,300

BUILDING PERMIT RECORD

Permit Id	Issue Date	Type	Description	Amount	Insp Date	% Comp	Date Comp	Comments

VISIT / CHANGE HISTORY

Date	Id	Type	Is	Cd	Purpost/Result

LAND LINE VALUATION SECTION

B	Use Code	Description	Zone	Land Type	Land Units		Unit Price	I. Factor	Site Index	Cond.	Nbhd.	Nhbd Adj	Notes	Location Adjustment		Adj Unit Pric	Land Value
6	210	Apartments	R-15		0.000	AC	0.00	1.00000	0	1.00		1.000			0		0
				Total Card Land Units	0.00	AC	Parcel Total Land Area:			14.90						Total Land Value	5,550,000

Property Location 10 EAST WINTONBURY AVE | Map ID O12/ / 59/ / | Bldg Name | State Use 210
Vision ID 2020 | Account # R02072 | Bldg # 6 | Sec # 1 of 1 | Card # 6 of 19 | Print Date 12/17/2025 12:18:08

CONSTRUCTION DETAIL

Element	Cd	Description
Style:	60	Apartments-Garden
Model	94	Commercial
Grade:	08	C
Stories:	2	2 Stories
Occupancy:	5.00	
Ext Wall A:	25	Vinyl Siding
Ext Wall B:		
Roof Struct:	03	Gable
Roof Cover:	03	Asphalt Shingl
Int Wall A:	05	Drywall
Int Wall B:		
Int Floor A:	14	Carpet
Int Floor B:		
Heating Fuel:	03	Gas
Heating Type:	05	Hot Water
AC Type:	100	
% Sprinkler:	0	
Bldg Use:	210	Apartments
Heat/AC:	00	None
Frame Type:	02	Wood Frame
Baths/Plumbing	02	Average
Ceiling/Walls:	06	Ceil & Wall
Rooms/Prtns:	02	Average
Wall Height:	8.00	
% Comn Wall:		
1st Floor Use:		

CONSTRUCTION DETAIL (CONTINUED)

Element	Cd	Description

MIXED USE

Code	Description	Percentage
210	Apartments	100
		0
		0

COST / MARKET VALUATION

RCN	1,290,521
Year Built	1973
Effective Year Built	
Depreciation Code	G
Remodel Rating	
Year Remodeled	
Depreciation %	35
Functional Obsol	
External Obsol	20
Trend Factor	1
Condition	
Condition %	
Percent Good	45
Cns Sect Rcnld	580,700
Dep % Ovr	
Dep Ovr Comment	
Misc Imp Ovr	
Misc Imp Ovr Comment	
Cost to Cure Ovr	
Cost to Cure Ovr Comment	

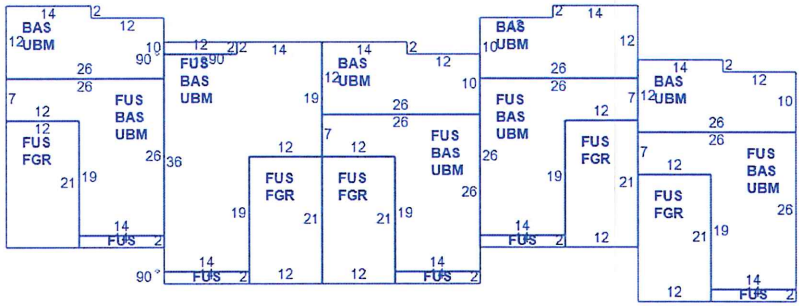

OB - OUTBUILDING & YARD ITEMS(L) / XF - BUILDING EXTRA FEATURES(B)

Code	Descripti	Sub	Sub Ty	L/B	Units	Unit Price	Yr Blt	Cond. Cd	% Gd	Grade	Grade Ad	Appr. V

BUILDING SUB-AREA SUMMARY SECTION

Code	Description	Living Area	Floor Area	Eff Area	Unit Cost	Undeprec Value
BAS	First Floor	3,680	3,680	3,680	0	
FGR	Garage	0	1,260	504	0	
FUS	Finished Upper Story	3,952	3,952	3,952	0	
UBM	Basement	0	3,680	736	0	
	Ttl Gross Liv / Lease Area	7,632	12,572	8,872		

Property Location 10 EAST WINTONBURY AVE | Map ID O12/ / 59/ / | Bldg Name | State Use 210
Vision ID 2020 | Account # R02072 | Bldg # 7 | Sec # 1 of 1 | Card # 7 of 19 | Print Date 12/17/2025 12:18:08

CURRENT OWNER	TOPO	UTILITIES	STRT / ROAD	LOCATION
WINTONBURY OWNERS LLC C/O PAREDIM PARTNERS LLC 45 KNOLLWOOD ROAD STE 305 ELMSFORD NY 10523				

SUPPLEMENTAL DATA

Alt Prcl ID	179-1 1-6	Reval Data	
Census:	4715	Callback Lt	
Foundation	POURED CONC.	Permit Dat	
Fire Dist:	B		
Condo Mdl			
Unsold Co			
GIS ID	2020	Assoc Pid#	

CURRENT ASSESSMENT

Description	Code	Appraised	Assessed
Comm Land	2-1	5,550,000	3,885,000
Apartment	2-3	12,692,100	8,884,470
Comm OB	2-5	187,200	131,040
Total		18,429,300	12,900,510

6011

BLOOMFIELD, CT

VISION

RECORD OF OWNERSHIP

	BK-VOL/PAGE		SALE DATE	Q/U	V/I	SALE PRICE	VC
WINTONBURY OWNERS LLC	1153	0349	05-28-2004	U	I	7,650,000	34

PREVIOUS ASSESSMENTS (HISTORY)

Year	Code	Assessed	Year	Code	Assessed	Year	Code	Assessed
2024	2-1	3,885,000	2024	2-1	3,885,000	2023	2-1	2,913,750
	2-3	8,884,470		2-3	8,884,470		2-3	6,041,350
	2-5	117,180		2-5	117,180		2-5	86,170
	Total	12,886,650		Total	12,886,650		Total	9,041,270

EXEMPTIONS

Year	Code	Description	Amount
		Total	0.00

OTHER ASSESSMENTS

Code	Description	Number	Amount	Comm Int

This signature acknowledges a visit by a Data Collector or Assessor

ASSESSING NEIGHBORHOOD

Nbhd	Sub	Nbhd Name	B	Tracing	Batch
0001	A				

NOTES

2019 - UNITS 54,56,58,60, & 62
WALL A/C
NEW ROOF 2017
BLDG 7: (4) 2 BD 1.5 BTH
(1) 3 BD 1.5 BTH R04126F

APPRAISED VALUE SUMMARY

Appraised Bldg. Value (Card)	12,692,100
Appraised Xf (B) Value (Bldg)	0
Appraised Ob (B) Value (Bldg)	187,200
Appraised Land Value (Bldg)	5,550,000
Special Land Value	0
Total Appraised Parcel Value	18,429,300
Valuation Method	C
Total Appraised Parcel Value	18,429,300

BUILDING PERMIT RECORD

Permit Id	Issue Date	Type	Description	Amount	Insp Date	% Comp	Date Comp	Comments

VISIT / CHANGE HISTORY

Date	Id	Type	Is	Cd	Purpost/Result

LAND LINE VALUATION SECTION

B	Use Code	Description	Zone	Land Type	Land Units		Unit Price	I. Factor	Site Index	Cond.	Nbhd.	Nhbd Adj	Notes	Location Adjustment		Adj Unit Pric	Land Value
7	210	Apartments	R-15		0.000	AC	0.00	1.00000	0	1.00		1.000			0		0
				Total Card Land Units	0.00	AC	Parcel Total Land Area:			14.90						Total Land Value	5,550,000

Property Location 10 EAST WINTONBURY AVE | Map ID O12/ / 59/ / | Bldg Name | State Use 210
Vision ID 2020 | Account # R02072 | Bldg # 7 | Sec # 1 of 1 | Card # 7 of 19 | Print Date 12/17/2025 12:18:09

CONSTRUCTION DETAIL

Element	Cd	Description
Style:	60	Apartments-Garden
Model	94	Commercial
Grade:	08	C
Stories:	2	2 Stories
Occupancy:	5.00	
Ext Wall A:	25	Vinyl Siding
Ext Wall B:		
Roof Struct:	03	Gable
Roof Cover:	12	Arch Shingles
Int Wall A:	05	Drywall
Int Wall B:		
Int Floor A:	14	Carpet
Int Floor B:		
Heating Fuel:	03	Gas
Heating Type:	05	Hot Water
AC Type:	100	
% Sprinkler:	0	
Bldg Use:	210	Apartments
Heat/AC:	00	None
Frame Type:	02	Wood Frame
Baths/Plumbing	02	Average
Ceiling/Walls:	06	Ceil & Wall
Rooms/Prtns:	02	Average
Wall Height:	8.00	
% Comn Wall:		
1st Floor Use:		

CONSTRUCTION DETAIL (CONTINUED)

Element	Cd	Description

MIXED USE

Code	Description	Percentage
210	Apartments	100
		0
		0

COST / MARKET VALUATION

RCN	1,290,521
Year Built	1973
Effective Year Built	
Depreciation Code	G
Remodel Rating	
Year Remodeled	
Depreciation %	35
Functional Obsol	
External Obsol	20
Trend Factor	1
Condition	
Condition %	
Percent Good	45
Cns Sect Rcnld	580,700
Dep % Ovr	
Dep Ovr Comment	
Misc Imp Ovr	
Misc Imp Ovr Comment	
Cost to Cure Ovr	
Cost to Cure Ovr Comment	

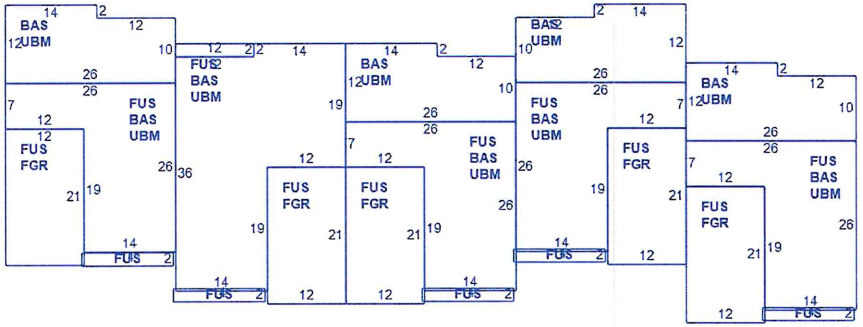

OB - OUTBUILDING & YARD ITEMS(L) / XF - BUILDING EXTRA FEATURES(B)

Code	Descripti	Sub	Sub Ty	L/B	Units	Unit Price	Yr Blt	Cond. Cd	% Gd	Grade	Grade Ad	Appr. V

BUILDING SUB-AREA SUMMARY SECTION

Code	Description	Living Area	Floor Area	Eff Area	Unit Cost	Undeprec Value
BAS	First Floor	3,680	3,680	3,680	0	
FGR	Garage	0	1,260	504	0	
FUS	Finished Upper Story	3,952	3,952	3,952	0	
UBM	Basement	0	3,680	736	0	
	Ttl Gross Liv / Lease Area	7,632	12,572	8,872		

Property Location 10 EAST WINTONBURY AVE | Map ID O12/ / 59/ / | Bldg Name | State Use 210
Vision ID 2020 | Account # R02072 | Bldg # 8 | Sec # 1 of 1 | Card # 8 of 19 | Print Date 12/17/2025 12:18:09

CURRENT OWNER

WINTONBURY OWNERS LLC
C/O PAREDIM PARTNERS LLC
45 KNOLLWOOD ROAD STE 305
ELMSFORD NY 10523

TOPO / UTILITIES / STRT / ROAD / LOCATION

SUPPLEMENTAL DATA

Alt Prcl ID	179-1 1-6	Reval Data	
Census:	4715	Callback Lt	
Foundation	POURED CONC.	Permit Dat	
Fire Dist:	B		
Condo Mdl			
Unsold Co			
GIS ID	2020	Assoc Pid#	

CURRENT ASSESSMENT

Description	Code	Appraised	Assessed
Comm Land	2-1	5,550,000	3,885,000
Apartment	2-3	12,692,100	8,884,470
Comm OB	2-5	187,200	131,040
Total		18,429,300	12,900,510

6011
BLOOMFIELD, CT

VISION

RECORD OF OWNERSHIP

	BK-VOL/PAGE		SALE DATE	Q/U	V/I	SALE PRICE	VC
WINTONBURY OWNERS LLC	1153	0349	05-28-2004	U	I	7,650,000	34

PREVIOUS ASSESSMENTS (HISTORY)

Year	Code	Assessed	Year	Code	Assessed	Year	Code	Assessed
2024	2-1	3,885,000	2024	2-1	3,885,000	2023	2-1	2,913,750
	2-3	8,884,470		2-3	8,884,470		2-3	6,041,350
	2-5	117,180		2-5	117,180		2-5	86,170
	Total	12,886,650		Total	12,886,650		Total	9,041,270

EXEMPTIONS

Year	Code	Description	Amount
		Total	0.00

OTHER ASSESSMENTS

Code	Description	Number	Amount	Comm Int

This signature acknowledges a visit by a Data Collector or Assessor

ASSESSING NEIGHBORHOOD

Nbhd	Sub	Nbhd Name	B	Tracing	Batch
0001	A				

NOTES

2019 - UNITS 64,66,68,70, & 72
WALL A/C
NEW ROOF 2017
BLDG 8: (4) 2 BD 1.5 BTH
(1) 3 BD 1.5 BTH R04126G

APPRAISED VALUE SUMMARY

Appraised Bldg. Value (Card)	12,692,100
Appraised Xf (B) Value (Bldg)	0
Appraised Ob (B) Value (Bldg)	187,200
Appraised Land Value (Bldg)	5,550,000
Special Land Value	0
Total Appraised Parcel Value	18,429,300
Valuation Method	C
Total Appraised Parcel Value	18,429,300

BUILDING PERMIT RECORD

Permit Id	Issue Date	Type	Description	Amount	Insp Date	% Comp	Date Comp	Comments

VISIT / CHANGE HISTORY

Date	Id	Type	Is	Cd	Purpost/Result

LAND LINE VALUATION SECTION

B	Use Code	Description	Zone	Land Type	Land Units		Unit Price	I. Factor	Site Index	Cond.	Nbhd.	Nhbd Adj	Notes	Location Adjustment		Adj Unit Pric	Land Value
8	210	Apartments	R-15		0.000	AC	0.00	1.00000	0	1.00		1.000			0		0
				Total Card Land Units	0.00	AC	Parcel Total Land Area:			14.90						Total Land Value	5,550,000

Property Location 10 EAST WINTONBURY AVE | Map ID O12/ / 59/ / | Bldg Name | State Use 210
Vision ID 2020 | Account # R02072 | Bldg # 8 | Sec # 1 of 1 | Card # 8 of 19 | Print Date 12/17/2025 12:18:09

CONSTRUCTION DETAIL

Element	Cd	Description
Style:	60	Apartments-Garden
Model	94	Commercial
Grade:	08	C
Stories:	2	2 Stories
Occupancy:	5.00	
Ext Wall A:	25	Vinyl Siding
Ext Wall B:		
Roof Struct:	03	Gable
Roof Cover:	12	Arch Shingles
Int Wall A:	05	Drywall
Int Wall B:		
Int Floor A:	14	Carpet
Int Floor B:		
Heating Fuel:	03	Gas
Heating Type:	05	Hot Water
AC Type:	100	
% Sprinkler:	0	
Bldg Use:	210	Apartments
Heat/AC:	00	None
Frame Type:	02	Wood Frame
Baths/Plumbing	02	Average
Ceiling/Walls:	06	Ceil & Wall
Rooms/Prtns:	02	Average
Wall Height:	8.00	
% Comn Wall:		
1st Floor Use:		

CONSTRUCTION DETAIL (CONTINUED)

Element	Cd	Description

MIXED USE

Code	Description	Percentage
210	Apartments	100
		0
		0

COST / MARKET VALUATION

RCN	1,290,521
Year Built	1973
Effective Year Built	
Depreciation Code	G
Remodel Rating	
Year Remodeled	
Depreciation %	35
Functional Obsol	
External Obsol	20
Trend Factor	1
Condition	
Condition %	
Percent Good	45
Cns Sect Rcnld	580,700
Dep % Ovr	
Dep Ovr Comment	
Misc Imp Ovr	
Misc Imp Ovr Comment	
Cost to Cure Ovr	
Cost to Cure Ovr Comment	

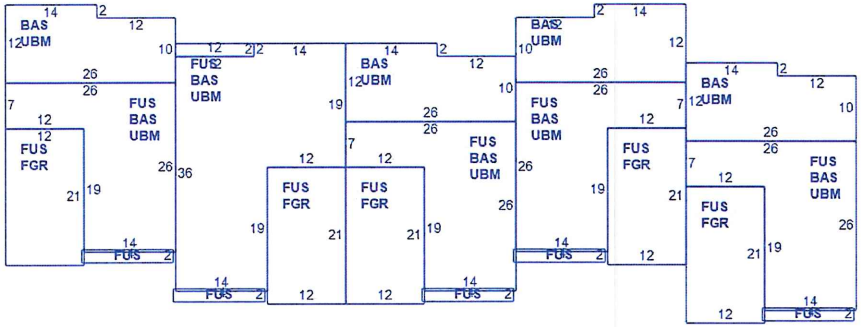

OB - OUTBUILDING & YARD ITEMS(L) / XF - BUILDING EXTRA FEATURES(B)

Code	Descripti	Sub	Sub Ty	L/B	Units	Unit Price	Yr Blt	Cond. Cd	% Gd	Grade	Grade Ad	Appr. V

BUILDING SUB-AREA SUMMARY SECTION

Code	Description	Living Area	Floor Area	Eff Area	Unit Cost	Undeprec Value
BAS	First Floor	3,680	3,680	3,680	0	
FGR	Garage	0	1,260	504	0	
FUS	Finished Upper Story	3,952	3,952	3,952	0	
UBM	Basement	0	3,680	736	0	
	Ttl Gross Liv / Lease Area	7,632	12,572	8,872		

Property Location 10 EAST WINTONBURY AVE | Map ID O12/ / 59/ / | Bldg Name | State Use 210
Vision ID 2020 | Account # R02072 | Bldg # 9 | Sec # 1 of 1 | Card # 9 of 19 | Print Date 12/17/2025 12:18:10

CURRENT OWNER

WINTONBURY OWNERS LLC
C/O PAREDIM PARTNERS LLC
45 KNOLLWOOD ROAD STE 305
ELMSFORD NY 10523

TOPO / UTILITIES / STRT / ROAD / LOCATION

SUPPLEMENTAL DATA

Alt Prcl ID	179-1 1-6	Reval Data	
Census:	4715	Callback Lt	
Foundation	POURED CONC.	Permit Dat	
Fire Dist:	B		
Condo Mdl			
Unsold Co			
GIS ID	2020	Assoc Pid#	

CURRENT ASSESSMENT

Description	Code	Appraised	Assessed
Comm Land	2-1	5,550,000	3,885,000
Apartment	2-3	12,692,100	8,884,470
Comm OB	2-5	187,200	131,040
Total		18,429,300	12,900,510

6011
BLOOMFIELD, CT

VISION

RECORD OF OWNERSHIP

	BK-VOL/PAGE		SALE DATE	Q/U	V/I	SALE PRICE	VC
WINTONBURY OWNERS LLC	1153	0349	05-28-2004	U	I	7,650,000	34

PREVIOUS ASSESSMENTS (HISTORY)

Year	Code	Assessed	Year	Code	Assessed	Year	Code	Assessed
2024	2-1	3,885,000	2024	2-1	3,885,000	2023	2-1	2,913,750
	2-3	8,884,470		2-3	8,884,470		2-3	6,041,350
	2-5	117,180		2-5	117,180		2-5	86,170
	Total	12,886,650		Total	12,886,650		Total	9,041,270

EXEMPTIONS

Year	Code	Description	Amount
		Total	0.00

OTHER ASSESSMENTS

Code	Description	Number	Amount	Comm Int

This signature acknowledges a visit by a Data Collector or Assessor

ASSESSING NEIGHBORHOOD

Nbhd	Sub	Nbhd Name	B	Tracing	Batch
0001	A				

NOTES

2019 - UNITS 37,39,41,43, & 45
WALL A/C - NEW ROOF 2017
BLDG 9: (4) 2 BD 1.5 BTH
(1) 3 BD 1.5 BTH

R04126H

APPRAISED VALUE SUMMARY

Appraised Bldg. Value (Card)	12,692,100
Appraised Xf (B) Value (Bldg)	0
Appraised Ob (B) Value (Bldg)	187,200
Appraised Land Value (Bldg)	5,550,000
Special Land Value	0
Total Appraised Parcel Value	18,429,300
Valuation Method	C
Total Appraised Parcel Value	18,429,300

BUILDING PERMIT RECORD

Permit Id	Issue Date	Type	Description	Amount	Insp Date	% Comp	Date Comp	Comments

VISIT / CHANGE HISTORY

Date	Id	Type	Is	Cd	Purpost/Result

LAND LINE VALUATION SECTION

B	Use Code	Description	Zone	Land Type	Land Units		Unit Price	I. Factor	Site Index	Cond.	Nbhd.	Nhbd Adj	Notes	Location Adjustment		Adj Unit Pric	Land Value
9	210	Apartments	R-15		0.000	AC	0.00	1.00000	0	1.00		1.000			0		0
				Total Card Land Units	0.00	AC	Parcel Total Land Area:			14.90						Total Land Value	5,550,000

Property Location 10 EAST WINTONBURY AVE | Map ID O12/ / 59/ / | Bldg Name | State Use 210
Vision ID 2020 | Account # R02072 | Bldg # 9 | Sec # 1 of 1 | Card # 9 of 19 | Print Date 12/17/2025 12:18:10

CONSTRUCTION DETAIL

Element	Cd	Description
Style:	60	Apartments-Garden
Model	94	Commercial
Grade:	08	C
Stories:	2	2 Stories
Occupancy:	5.00	
Ext Wall A:	26	Aluminum Sidng
Ext Wall B:		
Roof Struct:	03	Gable
Roof Cover:	12	Arch Shingles
Int Wall A:	05	Drywall
Int Wall B:		
Int Floor A:	14	Carpet
Int Floor B:		
Heating Fuel:	03	Gas
Heating Type:	05	Hot Water
AC Type:	100	
% Sprinkler:	0	
Bldg Use:	210	Apartments
Heat/AC:	00	None
Frame Type:	02	Wood Frame
Baths/Plumbing	02	Average
Ceiling/Walls:	06	Ceil & Wall
Rooms/Prtns:	02	Average
Wall Height:	8.00	
% Comn Wall:		
1st Floor Use:		

CONSTRUCTION DETAIL (CONTINUED)

Element	Cd	Description

MIXED USE

Code	Description	Percentage
210	Apartments	100
		0
		0

COST / MARKET VALUATION

RCN	1,294,116
Year Built	1973
Effective Year Built	
Depreciation Code	G
Remodel Rating	
Year Remodeled	
Depreciation %	35
Functional Obsol	
External Obsol	20
Trend Factor	1
Condition	
Condition %	
Percent Good	45
Cns Sect Rcnld	582,400
Dep % Ovr	
Dep Ovr Comment	
Misc Imp Ovr	
Misc Imp Ovr Comment	
Cost to Cure Ovr	
Cost to Cure Ovr Comment	

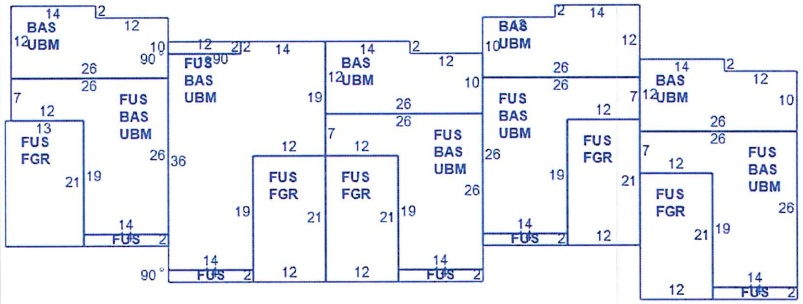

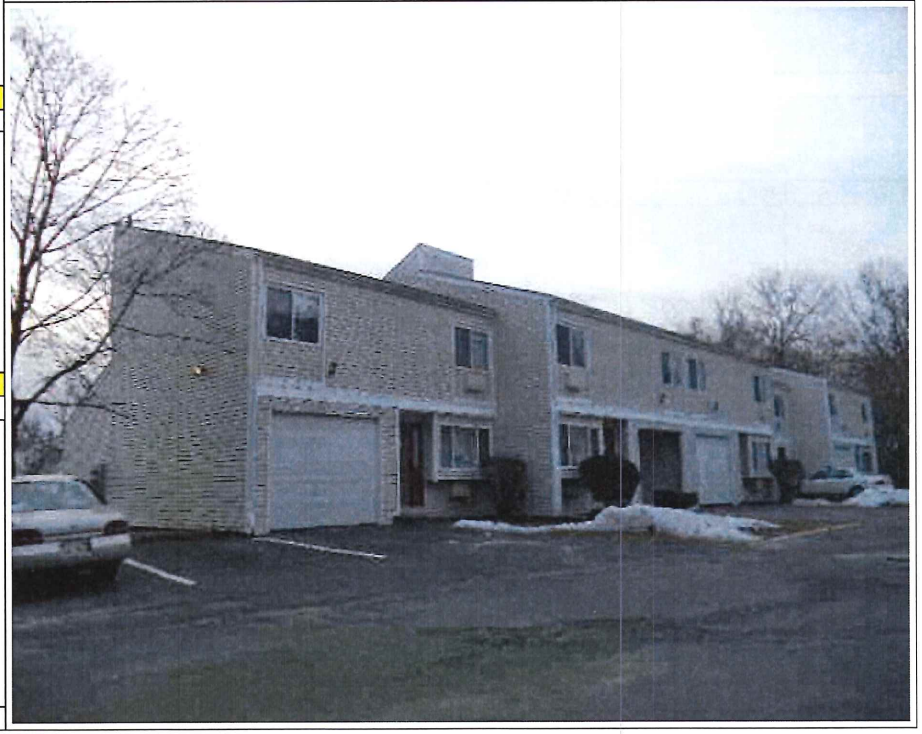

OB - OUTBUILDING & YARD ITEMS(L) / XF - BUILDING EXTRA FEATURES(B)

Code	Descripti	Sub	Sub Ty	L/B	Units	Unit Price	Yr Blt	Cond. Cd	% Gd	Grade	Grade Ad	Appr. V

BUILDING SUB-AREA SUMMARY SECTION

Code	Description	Living Area	Floor Area	Eff Area	Unit Cost	Undeprec Value
BAS	First Floor	3,680	3,680	3,680	0	
FGR	Garage	0	1,281	512	0	
FUS	Finished Upper Story	3,973	3,973	3,973	0	
UBM	Basement	0	3,680	736	0	
	Ttl Gross Liv / Lease Area	7,653	12,614	8,901		

Property Location 10 EAST WINTONBURY AVE | Map ID O12/ / 59/ / | Bldg Name | State Use 210
Vision ID 2020 | Account # R02072 | Bldg # 10 | Sec # 1 of 1 | Card # 10 of 19 | Print Date 12/17/2025 12:18:10

CURRENT OWNER

WINTONBURY OWNERS LLC
C/O PAREDIM PARTNERS LLC
45 KNOLLWOOD ROAD STE 305
ELMSFORD NY 10523

TOPO	UTILITIES	STRT / ROAD	LOCATION

SUPPLEMENTAL DATA

Alt Prcl ID	179-1 1-6	Reval Data	
Census:	4715	Callback Lt	
Foundation	POURED CONC.	Permit Dat	
Fire Dist:	B		
Condo Mdl			
Unsold Co			
GIS ID	2020	Assoc Pid#	

CURRENT ASSESSMENT

Description	Code	Appraised	Assessed
Comm Land	2-1	5,550,000	3,885,000
Apartment	2-3	12,692,100	8,884,470
Comm OB	2-5	187,200	131,040
Total		18,429,300	12,900,510

6011
BLOOMFIELD, CT

VISION

RECORD OF OWNERSHIP

	BK-VOL/PAGE		SALE DATE	Q/U	V/I	SALE PRICE	VC
WINTONBURY OWNERS LLC	1153	0349	05-28-2004	U	I	7,650,000	34

PREVIOUS ASSESSMENTS (HISTORY)

Year	Code	Assessed	Year	Code	Assessed	Year	Code	Assessed
2024	2-1	3,885,000	2024	2-1	3,885,000	2023	2-1	2,913,750
	2-3	8,884,470		2-3	8,884,470		2-3	6,041,350
	2-5	117,180		2-5	117,180		2-5	86,170
	Total	12,886,650		Total	12,886,650		Total	9,041,270

EXEMPTIONS

Year	Code	Description	Amount
		Total	0.00

OTHER ASSESSMENTS

Code	Description	Number	Amount	Comm Int

This signature acknowledges a visit by a Data Collector or Assessor

ASSESSING NEIGHBORHOOD

Nbhd	Sub	Nbhd Name	B	Tracing	Batch
0001	A				

NOTES

2019 - UNIS 67,69,71, & 73
WALL A/C NEW ROOF 2017
BLDG 10: (1) 2 BD 1.5 BTH
(3) 3 BD 1.5 BTH

R04126I

APPRAISED VALUE SUMMARY

Appraised Bldg. Value (Card)	12,692,100
Appraised Xf (B) Value (Bldg)	0
Appraised Ob (B) Value (Bldg)	187,200
Appraised Land Value (Bldg)	5,550,000
Special Land Value	0
Total Appraised Parcel Value	18,429,300
Valuation Method	C
Total Appraised Parcel Value	18,429,300

BUILDING PERMIT RECORD

Permit Id	Issue Date	Type	Description	Amount	Insp Date	% Comp	Date Comp	Comments

VISIT / CHANGE HISTORY

Date	Id	Type	Is	Cd	Purpost/Result

LAND LINE VALUATION SECTION

B	Use Code	Description	Zone	Land Type	Land Units		Unit Price	I. Factor	Site Index	Cond.	Nbhd.	Nhbd Adj	Notes	Location Adjustment		Adj Unit Pric	Land Value
10	210	Apartments	R-15		0.000	AC	0.00	1.00000	0	1.00		1.000			0		0
				Total Card Land Units	0.00	AC	Parcel Total Land Area:			14.90						Total Land Value	5,550,000

Property Location 10 EAST WINTONBURY AVE | Map ID O12/ / 59/ / | Bldg Name | State Use 210
Vision ID 2020 | Account # R02072 | Bldg # 10 | Sec # 1 of 1 | Card # 10 of 19 | Print Date 12/17/2025 12:18:11

CONSTRUCTION DETAIL

Element	Cd	Description
Style:	60	Apartments-Garden
Model	94	Commercial
Grade:	08	C
Stories:	2	2 Stories
Occupancy:	4.00	
Ext Wall A:	25	Vinyl Siding
Ext Wall B:		
Roof Struct:	03	Gable
Roof Cover:	12	Arch Shingles
Int Wall A:	05	Drywall
Int Wall B:		
Int Floor A:	14	Carpet
Int Floor B:		
Heating Fuel:	03	Gas
Heating Type:	05	Hot Water
AC Type:	100	
% Sprinkler:	0	
Bldg Use:	210	Apartments
Heat/AC:	00	None
Frame Type:	02	Wood Frame
Baths/Plumbing	02	Average
Ceiling/Walls:	06	Ceil & Wall
Rooms/Prtns:	02	Average
Wall Height:	8.00	
% Comn Wall:		
1st Floor Use:		

CONSTRUCTION DETAIL (CONTINUED)

Element	Cd	Description

MIXED USE

Code	Description	Percentage
210	Apartments	100
		0
		0

COST / MARKET VALUATION

RCN	1,058,364
Year Built	1973
Effective Year Built	
Depreciation Code	G
Remodel Rating	
Year Remodeled	
Depreciation %	35
Functional Obsol	
External Obsol	20
Trend Factor	1
Condition	
Condition %	
Percent Good	45
Cns Sect Rcnld	476,300
Dep % Ovr	
Dep Ovr Comment	
Misc Imp Ovr	
Misc Imp Ovr Comment	
Cost to Cure Ovr	
Cost to Cure Ovr Comment	

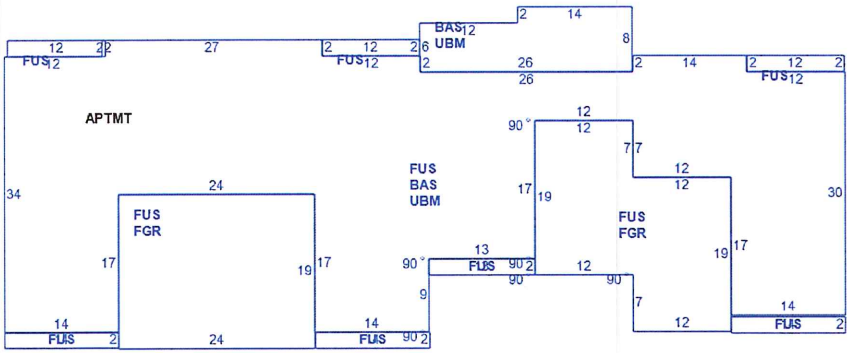

OB - OUTBUILDING & YARD ITEMS(L) / XF - BUILDING EXTRA FEATURES(B)

Code	Descripti	Sub	Sub Ty	L/B	Units	Unit Price	Yr Blt	Cond. Cd	% Gd	Grade	Grade Ad	Appr. V

BUILDING SUB-AREA SUMMARY SECTION

Code	Description	Living Area	Floor Area	Eff Area	Unit Cost	Undeprec Value
BAS	First Floor	2,571	2,571	2,571	0	
FGR	Garage	0	912	365	0	
FUS	Finished Upper Story	3,481	3,481	3,481	0	
UBM	Basement	0	2,571	514	0	
	Ttl Gross Liv / Lease Area	6,052	9,535	6,931		

Property Location 10 EAST WINTONBURY AVE | Map ID O12/ / 59/ / | Bldg Name | State Use 210
Vision ID 2020 | Account # R02072 | Bldg # 11 | Sec # 1 of 1 | Card # 11 of 19 | Print Date 12/17/2025 12:18:11

CURRENT OWNER

WINTONBURY OWNERS LLC
C/O PAREDIM PARTNERS LLC
45 KNOLLWOOD ROAD STE 305
ELMSFORD NY 10523

TOPO / UTILITIES / STRT / ROAD / LOCATION

SUPPLEMENTAL DATA

Alt Prcl ID	179-1 1-6	Reval Data	
Census:	4715	Callback Lt	
Foundation	POURED CONC.	Permit Dat	
Fire Dist:	B		
Condo Mdl			
Unsold Co			
GIS ID	2020	Assoc Pid#	

CURRENT ASSESSMENT

Description	Code	Appraised	Assessed
Comm Land	2-1	5,550,000	3,885,000
Apartment	2-3	12,692,100	8,884,470
Comm OB	2-5	187,200	131,040
Total		18,429,300	12,900,510

6011
BLOOMFIELD, CT

VISION

RECORD OF OWNERSHIP

	BK-VOL/PAGE		SALE DATE	Q/U	V/I	SALE PRICE	VC
WINTONBURY OWNERS LLC	1153	0349	05-28-2004	U	I	7,650,000	34

PREVIOUS ASSESSMENTS (HISTORY)

Year	Code	Assessed	Year	Code	Assessed	Year	Code	Assessed
2024	2-1	3,885,000	2024	2-1	3,885,000	2023	2-1	2,913,750
	2-3	8,884,470		2-3	8,884,470		2-3	6,041,350
	2-5	117,180		2-5	117,180		2-5	86,170
	Total	12,886,650		Total	12,886,650		Total	9,041,270

EXEMPTIONS

Year	Code	Description	Amount
		Total	0.00

OTHER ASSESSMENTS

Code	Description	Number	Amount	Comm Int

This signature acknowledges a visit by a Data Collector or Assessor

ASSESSING NEIGHBORHOOD

Nbhd	Sub	Nbhd Name	B	Tracing	Batch
0001	A				

NOTES

2019 - UNITS 40,42,44,46,48,50 & 52 (2) 3 BD 1.5 BTH
12X22 BAS = COMMON LAUNDRY ROOM
UEP - STAIRS TO UBM
UNIT 40 - FACILITIES MNGR. HOUSING
WALL A/C R04126J
BLDG 11I (5) 2 BD 1.5 BTH

APPRAISED VALUE SUMMARY

Appraised Bldg. Value (Card)	12,692,100
Appraised Xf (B) Value (Bldg)	0
Appraised Ob (B) Value (Bldg)	187,200
Appraised Land Value (Bldg)	5,550,000
Special Land Value	0
Total Appraised Parcel Value	18,429,300
Valuation Method	C
Total Appraised Parcel Value	18,429,300

BUILDING PERMIT RECORD

Permit Id	Issue Date	Type	Description	Amount	Insp Date	% Comp	Date Comp	Comments

VISIT / CHANGE HISTORY

Date	Id	Type	Is	Cd	Purpost/Result

LAND LINE VALUATION SECTION

B	Use Code	Description	Zone	Land Type	Land Units		Unit Price	I. Factor	Site Index	Cond.	Nbhd.	Nhbd Adj	Notes	Location Adjustment		Adj Unit Pric	Land Value
11	210	Apartments	R-15		0.000	AC	0.00	1.00000	0	1.00		1.000			0		0
				Total Card Land Units	0.00	AC	Parcel Total Land Area:			14.90						Total Land Value	5,550,000

Property Location 10 EAST WINTONBURY AVE | Map ID O12/ / 59/ / | Bldg Name | State Use 210
Vision ID 2020 | Account # R02072 | Bldg # 11 | Sec # 1 of 1 | Card # 11 of 19 | Print Date 12/17/2025 12:18:11

CONSTRUCTION DETAIL

Element	Cd	Description
Style:	60	Apartments-Garden
Model	94	Commercial
Grade:	08	C
Stories:	2	2 Stories
Occupancy:	7.00	
Ext Wall A:	25	Vinyl Siding
Ext Wall B:		
Roof Struct:	03	Gable
Roof Cover:	12	Arch Shingles
Int Wall A:	05	Drywall
Int Wall B:		
Int Floor A:	14	Carpet
Int Floor B:		
Heating Fuel:	03	Gas
Heating Type:	05	Hot Water
AC Type:	100	
% Sprinkler:	0	
Bldg Use:	210	Apartments
Heat/AC:	00	None
Frame Type:	02	Wood Frame
Baths/Plumbing	02	Average
Ceiling/Walls:	06	Ceil & Wall
Rooms/Prtns:	02	Average
Wall Height:	8.00	
% Comn Wall:		
1st Floor Use:		

CONSTRUCTION DETAIL (CONTINUED)

Element	Cd	Description

MIXED USE

Code	Description	Percentage
210	Apartments	100
		0
		0

COST / MARKET VALUATION

RCN	1,770,032
Year Built	1973
Effective Year Built	
Depreciation Code	G
Remodel Rating	
Year Remodeled	
Depreciation %	35
Functional Obsol	
External Obsol	20
Trend Factor	1
Condition	
Condition %	
Percent Good	45
Cns Sect Rcnld	796,500
Dep % Ovr	
Dep Ovr Comment	
Misc Imp Ovr	
Misc Imp Ovr Comment	
Cost to Cure Ovr	
Cost to Cure Ovr Comment	

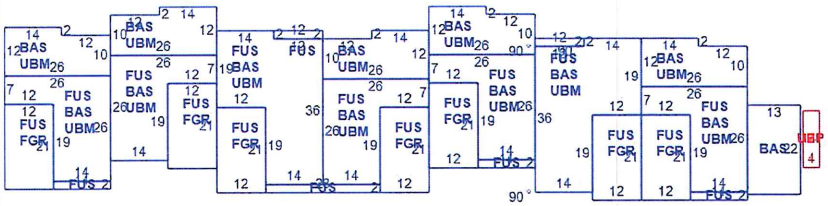

OB - OUTBUILDING & YARD ITEMS(L) / XF - BUILDING EXTRA FEATURES(B)

Code	Descripti	Sub	Sub Ty	L/B	Units	Unit Price	Yr Blt	Cond. Cd	% Gd	Grade	Grade Ad	Appr. V

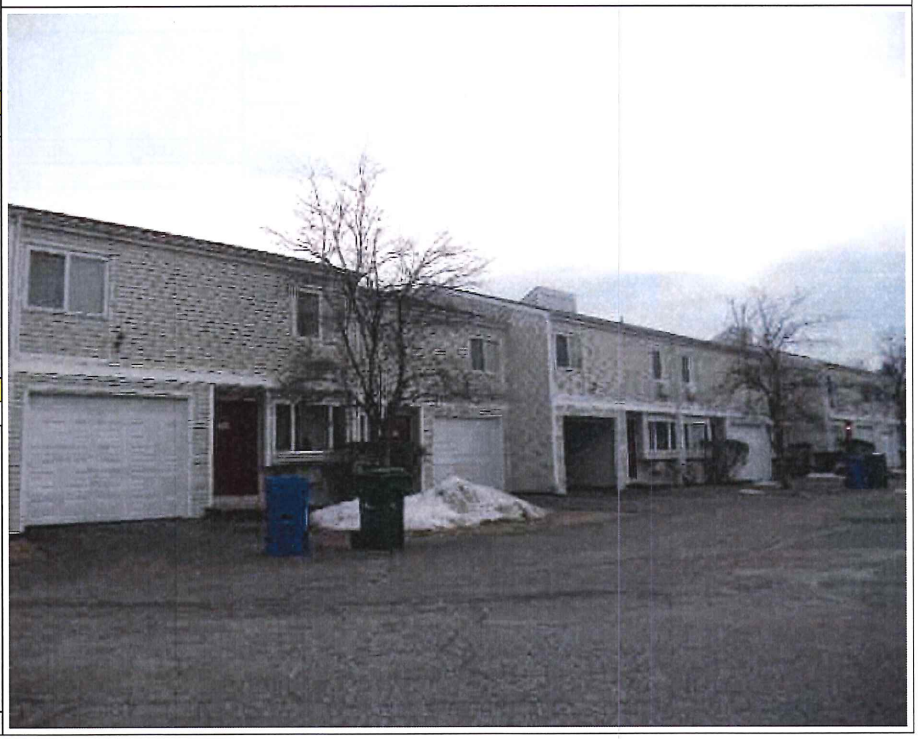

BUILDING SUB-AREA SUMMARY SECTION

Code	Description	Living Area	Floor Area	Eff Area	Unit Cost	Undeprec Value
BAS	First Floor	5,438	5,438	5,438	0	
FGR	Garage	0	1,764	706	0	
FUS	Finished Upper Story	5,664	5,664	5,664	0	
UBM	Basement	0	5,152	1,030	0	
UEP	Unfinished Enclosed Porch	0	56	20	0	
	Ttl Gross Liv / Lease Area	11,102	18,074	12,858		

Property Location 10 EAST WINTONBURY AVE | Map ID O12/ / 59/ / | Bldg Name | State Use 210
Vision ID 2020 | Account # R02072 | Bldg # 12 | Sec # 1 of 1 | Card # 12 of 19 | Print Date 12/17/2025 12:18:11

CURRENT OWNER

WINTONBURY OWNERS LLC
C/O PAREDIM PARTNERS LLC
45 KNOLLWOOD ROAD STE 305
ELMSFORD NY 10523

TOPO	UTILITIES	STRT / ROAD	LOCATION

SUPPLEMENTAL DATA

Alt Prcl ID	179-1 1-6	Reval Data	
Census:	4715	Callback Lt	
Foundation	POURED CONC.	Permit Dat	
Fire Dist:	B		
Condo Mdl			
Unsold Co			
GIS ID	2020	Assoc Pid#	

CURRENT ASSESSMENT

Description	Code	Appraised	Assessed
Comm Land	2-1	5,550,000	3,885,000
Apartment	2-3	12,692,100	8,884,470
Comm OB	2-5	187,200	131,040
Total		18,429,300	12,900,510

6011
BLOOMFIELD, CT

VISION

RECORD OF OWNERSHIP

	BK-VOL/PAGE		SALE DATE	Q/U	V/I	SALE PRICE	VC
WINTONBURY OWNERS LLC	1153	0349	05-28-2004	U	I	7,650,000	34

PREVIOUS ASSESSMENTS (HISTORY)

Year	Code	Assessed	Year	Code	Assessed	Year	Code	Assessed
2024	2-1	3,885,000	2024	2-1	3,885,000	2023	2-1	2,913,750
	2-3	8,884,470		2-3	8,884,470		2-3	6,041,350
	2-5	117,180		2-5	117,180		2-5	86,170
	Total	12,886,650		Total	12,886,650		Total	9,041,270

EXEMPTIONS

Year	Code	Description	Amount
		Total	0.00

OTHER ASSESSMENTS

Code	Description	Number	Amount	Comm Int

This signature acknowledges a visit by a Data Collector or Assessor

ASSESSING NEIGHBORHOOD

Nbhd	Sub	Nbhd Name	B	Tracing	Batch
0001	A				

NOTES

2019 - UNITS 74, 76, 78, 80, 82, 84 & 86
WALL A/C - NEW ROOF 2017
UEP - STAIRS TO UBM
BLDG 12: (5) 2 BD 1.5 BTH
(2) 3 BD 1.5 BTH R04126K

APPRAISED VALUE SUMMARY

Appraised Bldg. Value (Card)	12,692,100
Appraised Xf (B) Value (Bldg)	0
Appraised Ob (B) Value (Bldg)	187,200
Appraised Land Value (Bldg)	5,550,000
Special Land Value	0
Total Appraised Parcel Value	18,429,300
Valuation Method	C
Total Appraised Parcel Value	18,429,300

BUILDING PERMIT RECORD

Permit Id	Issue Date	Type	Description	Amount	Insp Date	% Comp	Date Comp	Comments

VISIT / CHANGE HISTORY

Date	Id	Type	Is	Cd	Purpost/Result

LAND LINE VALUATION SECTION

B	Use Code	Description	Zone	Land Type	Land Units		Unit Price	I. Factor	Site Index	Cond.	Nbhd.	Nhbd Adj	Notes	Location Adjustment		Adj Unit Pric	Land Value
12	210	Apartments	R-15		0.000	AC	0.00	1.00000	0	1.00		1.000			0		0
				Total Card Land Units	0.00	AC	Parcel Total Land Area:			14.90						Total Land Value	5,550,000

Property Location 10 EAST WINTONBURY AVE | Map ID O12/ / 59/ / | Bldg Name | State Use 210
Vision ID 2020 | Account # R02072 | Bldg # 12 | Sec # 1 of 1 | Card # 12 of 19 | Print Date 12/17/2025 12:18:12

CONSTRUCTION DETAIL

Element	Cd	Description
Style:	60	Apartments-Garden
Model	94	Commercial
Grade:	08	C
Stories:	2	2 Stories
Occupancy:	7.00	
Ext Wall A:	25	Vinyl Siding
Ext Wall B:		
Roof Struct:	03	Gable
Roof Cover:	12	Arch Shingles
Int Wall A:	05	Drywall
Int Wall B:		
Int Floor A:	14	Carpet
Int Floor B:		
Heating Fuel:	03	Gas
Heating Type:	05	Hot Water
AC Type:	100	
% Sprinkler:	0	
Bldg Use:	210	Apartments
Heat/AC:	00	None
Frame Type:	02	Wood Frame
Baths/Plumbing	02	Average
Ceiling/Walls:	06	Ceil & Wall
Rooms/Prtns:	02	Average
Wall Height:	8.00	
% Comn Wall:		
1st Floor Use:		

CONSTRUCTION DETAIL (CONTINUED)

Element	Cd	Description

MIXED USE

Code	Description	Percentage
210	Apartments	100
		0
		0

COST / MARKET VALUATION

RCN	1,742,940
Year Built	1973
Effective Year Built	
Depreciation Code	G
Remodel Rating	
Year Remodeled	
Depreciation %	35
Functional Obsol	
External Obsol	20
Trend Factor	1
Condition	
Condition %	
Percent Good	45
Cns Sect Rcnld	784,300
Dep % Ovr	
Dep Ovr Comment	
Misc Imp Ovr	
Misc Imp Ovr Comment	
Cost to Cure Ovr	
Cost to Cure Ovr Comment	

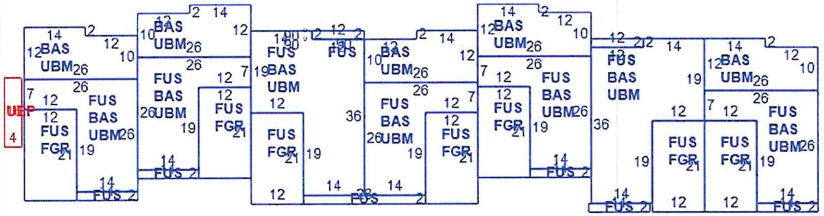

OB - OUTBUILDING & YARD ITEMS(L) / XF - BUILDING EXTRA FEATURES(B)

Code	Descripti	Sub	Sub Ty	L/B	Units	Unit Price	Yr Blt	Cond. Cd	% Gd	Grade	Grade Ad	Appr. V

BUILDING SUB-AREA SUMMARY SECTION

Code	Description	Living Area	Floor Area	Eff Area	Unit Cost	Undeprec Value
BAS	First Floor	5,152	5,152	5,152	0	
FGR	Garage	0	1,764	706	0	
FUS	Finished Upper Story	5,720	5,720	5,720	0	
UBM	Basement	0	5,152	1,030	0	
UEP	Unfinished Enclosed Porch	0	64	22	0	
	Ttl Gross Liv / Lease Area	10,872	17,852	12,630		

Property Location 10 EAST WINTONBURY AVE | Map ID O12/ / 59/ / | Bldg Name | State Use 210
Vision ID 2020 | Account # R02072 | Bldg # 13 | Sec # 1 of 1 | Card # 13 of 19 | Print Date 12/17/2025 12:18:12

CURRENT OWNER

WINTONBURY OWNERS LLC
C/O PAREDIM PARTNERS LLC
45 KNOLLWOOD ROAD STE 305
ELMSFORD NY 10523

TOPO / UTILITIES / STRT / ROAD / LOCATION

SUPPLEMENTAL DATA

Alt Prcl ID 179-1 1-6
Census: 4715
Foundation POURED CONC.
Fire Dist: B
Condo Mdl
Unsold Co
GIS ID 2020

Reval Data
Callback Lt
Permit Dat
Assoc Pid#

CURRENT ASSESSMENT

Description	Code	Appraised	Assessed
Comm Land	2-1	5,550,000	3,885,000
Apartment	2-3	12,692,100	8,884,470
Comm OB	2-5	187,200	131,040
Total		18,429,300	12,900,510

6011

BLOOMFIELD, CT

VISION

RECORD OF OWNERSHIP

	BK-VOL/PAGE		SALE DATE	Q/U	V/I	SALE PRICE	VC
WINTONBURY OWNERS LLC	1153	0349	05-28-2004	U	I	7,650,000	34

PREVIOUS ASSESSMENTS (HISTORY)

Year	Code	Assessed	Year	Code	Assessed	Year	Code	Assessed
2024	2-1	3,885,000	2024	2-1	3,885,000	2023	2-1	2,913,750
	2-3	8,884,470		2-3	8,884,470		2-3	6,041,350
	2-5	117,180		2-5	117,180		2-5	86,170
	Total	12,886,650		Total	12,886,650		Total	9,041,270

EXEMPTIONS

Year	Code	Description	Amount
		Total	0.00

OTHER ASSESSMENTS

Code	Description	Number	Amount	Comm Int

This signature acknowledges a visit by a Data Collector or Assessor

ASSESSING NEIGHBORHOOD

Nbhd	Sub	Nbhd Name	B	Tracing	Batch
0001	A				

NOTES

2019 - UNITS 47,49,51,53 & 55
WALL A/C
BLDG 13: (4) 2 BD 1.5 BTH
(1) 3 BD 1.5 BTH

R04126L

APPRAISED VALUE SUMMARY

Appraised Bldg. Value (Card)	12,692,100
Appraised Xf (B) Value (Bldg)	0
Appraised Ob (B) Value (Bldg)	187,200
Appraised Land Value (Bldg)	5,550,000
Special Land Value	0
Total Appraised Parcel Value	18,429,300
Valuation Method	C
Total Appraised Parcel Value	18,429,300

BUILDING PERMIT RECORD

Permit Id	Issue Date	Type	Description	Amount	Insp Date	% Comp	Date Comp	Comments

VISIT / CHANGE HISTORY

Date	Id	Type	Is	Cd	Purpost/Result

LAND LINE VALUATION SECTION

B	Use Code	Description	Zone	Land Type	Land Units		Unit Price	I. Factor	Site Index	Cond.	Nbhd.	Nhbd Adj	Notes	Location Adjustment		Adj Unit Pric	Land Value
13	210	Apartments	R-15		0.000	AC	0.00	1.00000	0	1.00		1.000			0		0
				Total Card Land Units	0.00	AC	Parcel Total Land Area:			14.90						Total Land Value	5,550,000

Property Location 10 EAST WINTONBURY AVE | Map ID O12/ / 59/ / | Bldg Name | State Use 210
Vision ID 2020 | Account # R02072 | Bldg # 13 | Sec # 1 of 1 | Card # 13 of 19 | Print Date 12/17/2025 12:18:12

CONSTRUCTION DETAIL

Element	Cd	Description
Style:	60	Apartments-Garden
Model	94	Commercial
Grade:	08	C
Stories:	2	2 Stories
Occupancy:	5.00	
Ext Wall A:	25	Vinyl Siding
Ext Wall B:		
Roof Struct:	03	Gable
Roof Cover:	03	Asphalt Shingl
Int Wall A:	05	Drywall
Int Wall B:		
Int Floor A:	14	Carpet
Int Floor B:		
Heating Fuel:	03	Gas
Heating Type:	05	Hot Water
AC Type:	100	
% Sprinkler:	0	
Bldg Use:	210	Apartments
Heat/AC:	00	None
Frame Type:	02	Wood Frame
Baths/Plumbing	02	Average
Ceiling/Walls:	06	Ceil & Wall
Rooms/Prtns:	02	Average
Wall Height:	8.00	
% Comn Wall:		
1st Floor Use:		

CONSTRUCTION DETAIL (CONTINUED)

Element	Cd	Description

MIXED USE

Code	Description	Percentage
210	Apartments	100
		0
		0

COST / MARKET VALUATION

RCN	1,290,521
Year Built	1973
Effective Year Built	
Depreciation Code	G
Remodel Rating	
Year Remodeled	
Depreciation %	35
Functional Obsol	
External Obsol	20
Trend Factor	1
Condition	
Condition %	
Percent Good	45
Cns Sect Rcnld	580,700
Dep % Ovr	
Dep Ovr Comment	
Misc Imp Ovr	
Misc Imp Ovr Comment	
Cost to Cure Ovr	
Cost to Cure Ovr Comment	

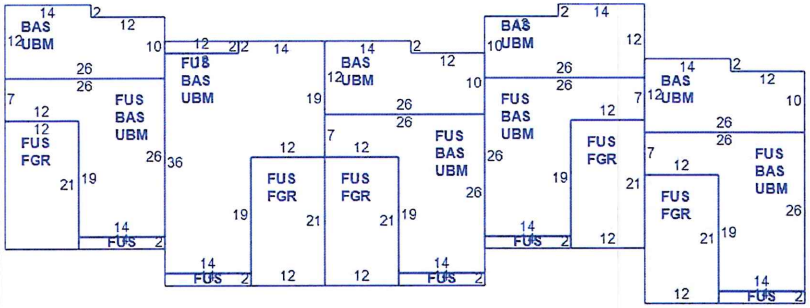

OB - OUTBUILDING & YARD ITEMS(L) / XF - BUILDING EXTRA FEATURES(B)

Code	Descripti	Sub	Sub Ty	L/B	Units	Unit Price	Yr Blt	Cond. Cd	% Gd	Grade	Grade Ad	Appr. V

BUILDING SUB-AREA SUMMARY SECTION

Code	Description	Living Area	Floor Area	Eff Area	Unit Cost	Undeprec Value
BAS	First Floor	3,680	3,680	3,680	0	
FGR	Garage	0	1,260	504	0	
FUS	Finished Upper Story	3,952	3,952	3,952	0	
UBM	Basement	0	3,680	736	0	
	Ttl Gross Liv / Lease Area	7,632	12,572	8,872		

Property Location 10 EAST WINTONBURY AVE | Map ID O12/ / 59/ / | Bldg Name | State Use 210
Vision ID 2020 | Account # R02072 | Bldg # 14 | Sec # 1 of 1 | Card # 14 of 19 | Print Date 12/17/2025 12:18:13

CURRENT OWNER

WINTONBURY OWNERS LLC
C/O PAREDIM PARTNERS LLC
45 KNOLLWOOD ROAD STE 305
ELMSFORD NY 10523

TOPO / UTILITIES / STRT / ROAD / LOCATION

SUPPLEMENTAL DATA

Alt Prcl ID	179-1 1-6	Reval Data	
Census:	4715	Callback Lt	
Foundation	POURED CONC.	Permit Dat	
Fire Dist:	B		
Condo Mdl			
Unsold Co			
GIS ID	2020	Assoc Pid#	

CURRENT ASSESSMENT

Description	Code	Appraised	Assessed
Comm Land	2-1	5,550,000	3,885,000
Apartment	2-3	12,692,100	8,884,470
Comm OB	2-5	187,200	131,040
Total		18,429,300	12,900,510

6011

BLOOMFIELD, CT

VISION

RECORD OF OWNERSHIP

	BK-VOL/PAGE		SALE DATE	Q/U	V/I	SALE PRICE	VC
WINTONBURY OWNERS LLC	1153	0349	05-28-2004	U	I	7,650,000	34

PREVIOUS ASSESSMENTS (HISTORY)

Year	Code	Assessed	Year	Code	Assessed	Year	Code	Assessed
2024	2-1	3,885,000	2024	2-1	3,885,000	2023	2-1	2,913,750
	2-3	8,884,470		2-3	8,884,470		2-3	6,041,350
	2-5	117,180		2-5	117,180		2-5	86,170
	Total	12,886,650		Total	12,886,650		Total	9,041,270

EXEMPTIONS

Year	Code	Description	Amount
		Total	0.00

OTHER ASSESSMENTS

Code	Description	Number	Amount	Comm Int

This signature acknowledges a visit by a Data Collector or Assessor

ASSESSING NEIGHBORHOOD

Nbhd	Sub	Nbhd Name	B	Tracing	Batch
0001	A				

NOTES

2019 UNITS 75,77,79,81,83,85 & 7
WALL A/C
BLDG 14: (5) 2 BD 1.5 BTH
(2) 3 BD 1.5 BTH

R04126M

APPRAISED VALUE SUMMARY

Appraised Bldg. Value (Card)	12,692,100
Appraised Xf (B) Value (Bldg)	0
Appraised Ob (B) Value (Bldg)	187,200
Appraised Land Value (Bldg)	5,550,000
Special Land Value	0
Total Appraised Parcel Value	18,429,300
Valuation Method	C
Total Appraised Parcel Value	18,429,300

BUILDING PERMIT RECORD

Permit Id	Issue Date	Type	Description	Amount	Insp Date	% Comp	Date Comp	Comments

VISIT / CHANGE HISTORY

Date	Id	Type	Is	Cd	Purpost/Result

LAND LINE VALUATION SECTION

B	Use Code	Description	Zone	Land Type	Land Units		Unit Price	I. Factor	Site Index	Cond.	Nbhd.	Nhbd Adj	Notes	Location Adjustment		Adj Unit Pric	Land Value
14	210	Apartments	R-15		0.000	AC	0.00	1.00000	0	1.00		1.000			0		0
				Total Card Land Units	0.00	AC	Parcel Total Land Area:			14.90						Total Land Value	5,550,000

Property Location 10 EAST WINTONBURY AVE | Map ID O12/ / 59/ / | Bldg Name | State Use 210
Vision ID 2020 | Account # R02072 | Bldg # 14 | Sec # 1 of 1 | Card # 14 of 19 | Print Date 12/17/2025 12:18:13

CONSTRUCTION DETAIL

Element	Cd	Description
Style:	60	Apartments-Garden
Model	94	Commercial
Grade:	08	C
Stories:	2	2 Stories
Occupancy:	7.00	
Ext Wall A:	25	Vinyl Siding
Ext Wall B:		
Roof Struct:	03	Gable
Roof Cover:	03	Asphalt Shingl
Int Wall A:	05	Drywall
Int Wall B:		
Int Floor A:	14	Carpet
Int Floor B:		
Heating Fuel:	03	Gas
Heating Type:	05	Hot Water
AC Type:	100	
% Sprinkler:	0	
Bldg Use:	210	Apartments
Heat/AC:	00	None
Frame Type:	02	Wood Frame
Baths/Plumbing	02	Average
Ceiling/Walls:	06	Ceil & Wall
Rooms/Prtns:	02	Average
Wall Height:	8.00	
% Comn Wall:		
1st Floor Use:		

CONSTRUCTION DETAIL (CONTINUED)

Element	Cd	Description

MIXED USE

Code	Description	Percentage
210	Apartments	100
		0
		0

COST / MARKET VALUATION

RCN	1,740,408
Year Built	1973
Effective Year Built	
Depreciation Code	G
Remodel Rating	
Year Remodeled	
Depreciation %	35
Functional Obsol	
External Obsol	20
Trend Factor	1
Condition	
Condition %	
Percent Good	45
Cns Sect Rcnld	783,200
Dep % Ovr	
Dep Ovr Comment	
Misc Imp Ovr	
Misc Imp Ovr Comment	
Cost to Cure Ovr	
Cost to Cure Ovr Comment	

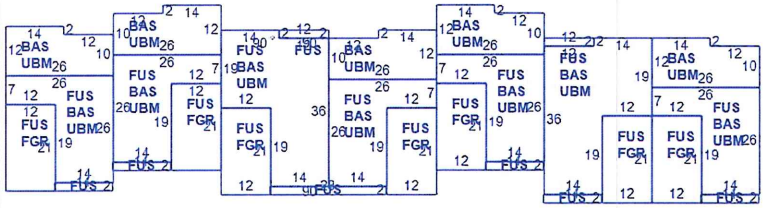

OB - OUTBUILDING & YARD ITEMS(L) / XF - BUILDING EXTRA FEATURES(B)

Code	Descripti	Sub	Sub Ty	L/B	Units	Unit Price	Yr Blt	Cond. Cd	% Gd	Grade	Grade Ad	Appr. V

BUILDING SUB-AREA SUMMARY SECTION

Code	Description	Living Area	Floor Area	Eff Area	Unit Cost	Undeprec Value
BAS	First Floor	5,152	5,152	5,152	0	
FGR	Garage	0	1,764	706	0	
FUS	Finished Upper Story	5,720	5,720	5,720	0	
UBM	Basement	0	5,152	1,030	0	
	Ttl Gross Liv / Lease Area	10,872	17,788	12,608		

Property Location 10 EAST WINTONBURY AVE | Map ID O12/ / 59/ / | Bldg Name | State Use 210
Vision ID 2020 | Account # R02072 | Bldg # 15 | Sec # 1 of 1 | Card # 15 of 19 | Print Date 12/17/2025 12:18:13

CURRENT OWNER

WINTONBURY OWNERS LLC
C/O PAREDIM PARTNERS LLC
45 KNOLLWOOD ROAD STE 305
ELMSFORD NY 10523

TOPO / UTILITIES / STRT / ROAD / LOCATION

SUPPLEMENTAL DATA

Alt Prcl ID	179-1 1-6	Reval Data	
Census:	4715	Callback Lt	
Foundation	POURED CONC.	Permit Dat	
Fire Dist:	B		
Condo Mdl			
Unsold Co			
GIS ID	2020	Assoc Pid#	

CURRENT ASSESSMENT

Description	Code	Appraised	Assessed
Comm Land	2-1	5,550,000	3,885,000
Apartment	2-3	12,692,100	8,884,470
Comm OB	2-5	187,200	131,040
	Total	18,429,300	12,900,510

6011
BLOOMFIELD, CT

VISION

RECORD OF OWNERSHIP

	BK-VOL/PAGE		SALE DATE	Q/U	V/I	SALE PRICE	VC
WINTONBURY OWNERS LLC	1153	0349	05-28-2004	U	I	7,650,000	34

PREVIOUS ASSESSMENTS (HISTORY)

Year	Code	Assessed	Year	Code	Assessed	Year	Code	Assessed
2024	2-1	3,885,000	2024	2-1	3,885,000	2023	2-1	2,913,750
	2-3	8,884,470		2-3	8,884,470		2-3	6,041,350
	2-5	117,180		2-5	117,180		2-5	86,170
	Total	12,886,650		Total	12,886,650		Total	9,041,270

EXEMPTIONS

Year	Code	Description	Amount
		Total	0.00

OTHER ASSESSMENTS

Code	Description	Number	Amount	Comm Int

This signature acknowledges a visit by a Data Collector or Assessor

ASSESSING NEIGHBORHOOD

Nbhd	Sub	Nbhd Name	B	Tracing	Batch
0001	A				

NOTES

2019 - UNITS 99,101,103,105,107,109, &
111
WALL UNIT A/C
BLDG 15: (5) 2 BD 1.5 BTH
(2) 3 BD 1.5 BTH R04126N

APPRAISED VALUE SUMMARY

Appraised Bldg. Value (Card)	12,692,100
Appraised Xf (B) Value (Bldg)	0
Appraised Ob (B) Value (Bldg)	187,200
Appraised Land Value (Bldg)	5,550,000
Special Land Value	0
Total Appraised Parcel Value	18,429,300
Valuation Method	C
Total Appraised Parcel Value	18,429,300

BUILDING PERMIT RECORD

Permit Id	Issue Date	Type	Description	Amount	Insp Date	% Comp	Date Comp	Comments

VISIT / CHANGE HISTORY

Date	Id	Type	Is	Cd	Purpost/Result

LAND LINE VALUATION SECTION

B	Use Code	Description	Zone	Land Type	Land Units		Unit Price	I. Factor	Site Index	Cond.	Nbhd.	Nhbd Adj	Notes	Location Adjustment		Adj Unit Pric	Land Value
15	210	Apartments	R-15		0.000	AC	0.00	1.00000	0	1.00		1.000			0		0
				Total Card Land Units	0.00	AC	Parcel Total Land Area:			14.90						Total Land Value	5,550,000

Property Location 10 EAST WINTONBURY AVE | Map ID O12/ / 59/ / | Bldg Name | State Use 210
Vision ID 2020 | Account # R02072 | Bldg # 15 | Sec # 1 of 1 | Card # 15 of 19 | Print Date 12/17/2025 12:18:14

CONSTRUCTION DETAIL

Element	Cd	Description
Style:	60	Apartments-Garden
Model	94	Commercial
Grade:	08	C
Stories:	2	2 Stories
Occupancy:	7.00	
Ext Wall A:	25	Vinyl Siding
Ext Wall B:		
Roof Struct:	03	Gable
Roof Cover:	03	Asphalt Shingl
Int Wall A:	05	Drywall
Int Wall B:		
Int Floor A:	14	Carpet
Int Floor B:		
Heating Fuel:	03	Gas
Heating Type:	05	Hot Water
AC Type:	100	
% Sprinkler:	0	
Bldg Use:	210	Apartments
Heat/AC:	00	None
Frame Type:	02	Wood Frame
Baths/Plumbing	02	Average
Ceiling/Walls:	06	Ceil & Wall
Rooms/Prtns:	02	Average
Wall Height:	8.00	
% Comn Wall:		
1st Floor Use:		

CONSTRUCTION DETAIL (CONTINUED)

Element	Cd	Description

MIXED USE

Code	Description	Percentage
210	Apartments	100
		0
		0

COST / MARKET VALUATION

RCN	1,740,408
Year Built	1973
Effective Year Built	
Depreciation Code	G
Remodel Rating	
Year Remodeled	
Depreciation %	35
Functional Obsol	
External Obsol	20
Trend Factor	1
Condition	
Condition %	
Percent Good	45
Cns Sect Rcnld	783,200
Dep % Ovr	
Dep Ovr Comment	
Misc Imp Ovr	
Misc Imp Ovr Comment	
Cost to Cure Ovr	
Cost to Cure Ovr Comment	

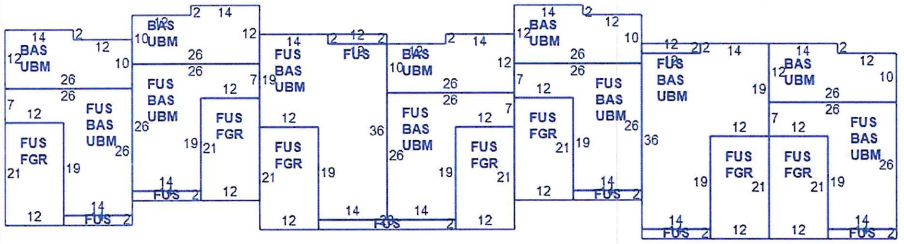

OB - OUTBUILDING & YARD ITEMS(L) / XF - BUILDING EXTRA FEATURES(B)

Code	Descripti	Sub	Sub Ty	L/B	Units	Unit Price	Yr Blt	Cond. Cd	% Gd	Grade	Grade Ad	Appr. V

BUILDING SUB-AREA SUMMARY SECTION

Code	Description	Living Area	Floor Area	Eff Area	Unit Cost	Undeprec Value
BAS	First Floor	5,152	5,152	5,152	0	
FGR	Garage	0	1,764	706	0	
FUS	Finished Upper Story	5,720	5,720	5,720	0	
UBM	Basement	0	5,152	1,030	0	
	Ttl Gross Liv / Lease Area	10,872	17,788	12,608		

Property Location 10 EAST WINTONBURY AVE | Map ID O12/ / 59/ / | Bldg Name | State Use 210
Vision ID 2020 | Account # R02072 | Bldg # 16 | Sec # 1 of 1 | Card # 16 of 19 | Print Date 12/17/2025 12:18:14

CURRENT OWNER

WINTONBURY OWNERS LLC
C/O PAREDIM PARTNERS LLC
45 KNOLLWOOD ROAD STE 305
ELMSFORD NY 10523

TOPO / UTILITIES / STRT / ROAD / LOCATION

SUPPLEMENTAL DATA

Alt Prcl ID	179-1 1-6	Reval Data	
Census:	4715	Callback Lt	
Foundation	POURED CONC.	Permit Dat	
Fire Dist:	B		
Condo Mdl			
Unsold Co			
GIS ID	2020	Assoc Pid#	

CURRENT ASSESSMENT

Description	Code	Appraised	Assessed
Comm Land	2-1	5,550,000	3,885,000
Apartment	2-3	12,692,100	8,884,470
Comm OB	2-5	187,200	131,040
	Total	18,429,300	12,900,510

6011

BLOOMFIELD, CT

VISION

RECORD OF OWNERSHIP

	BK-VOL/PAGE		SALE DATE	Q/U	V/I	SALE PRICE	VC
WINTONBURY OWNERS LLC	1153	0349	05-28-2004	U	I	7,650,000	34

PREVIOUS ASSESSMENTS (HISTORY)

Year	Code	Assessed	Year	Code	Assessed	Year	Code	Assessed
2024	2-1	3,885,000	2024	2-1	3,885,000	2023	2-1	2,913,750
	2-3	8,884,470		2-3	8,884,470		2-3	6,041,350
	2-5	117,180		2-5	117,180		2-5	86,170
	Total	12,886,650		Total	12,886,650		Total	9,041,270

EXEMPTIONS

Year	Code	Description	Amount
		Total	0.00

OTHER ASSESSMENTS

Code	Description	Number	Amount	Comm Int

This signature acknowledges a visit by a Data Collector or Assessor

ASSESSING NEIGHBORHOOD

Nbhd	Sub	Nbhd Name	B	Tracing	Batch
0001	A				

NOTES

2019 UNITS 89,91,93,95 & 97
WALL A/C - NEW ROOF 2017
BLDG 16: (4) 2 BD 1.5 BTH
(1) 3 BD 1.5 BTH

R04126O

APPRAISED VALUE SUMMARY

Appraised Bldg. Value (Card)	12,692,100
Appraised Xf (B) Value (Bldg)	0
Appraised Ob (B) Value (Bldg)	187,200
Appraised Land Value (Bldg)	5,550,000
Special Land Value	0
Total Appraised Parcel Value	18,429,300
Valuation Method	C
Total Appraised Parcel Value	18,429,300

BUILDING PERMIT RECORD

Permit Id	Issue Date	Type	Description	Amount	Insp Date	% Comp	Date Comp	Comments

VISIT / CHANGE HISTORY

Date	Id	Type	Is	Cd	Purpost/Result

LAND LINE VALUATION SECTION

B	Use Code	Description	Zone	Land Type	Land Units		Unit Price	I. Factor	Site Index	Cond.	Nbhd.	Nhbd Adj	Notes	Location Adjustment		Adj Unit Pric	Land Value
16	210	Apartments	R-15		0.000	AC	0.00	1.00000	0	1.00		1.000			0		0
				Total Card Land Units	0.00	AC	Parcel Total Land Area:			14.90						Total Land Value	5,550,000

Property Location 10 EAST WINTONBURY AVE | Map ID O12/ / 59/ / | Bldg Name | State Use 210
Vision ID 2020 | Account # R02072 | Bldg # 16 | Sec # 1 of 1 | Card # 16 of 19 | Print Date 12/17/2025 12:18:14

CONSTRUCTION DETAIL

Element	Cd	Description
Style:	60	Apartments-Garden
Model	94	Commercial
Grade:	08	C
Stories:	2	2 Stories
Occupancy:	5.00	
Ext Wall A:	25	Vinyl Siding
Ext Wall B:		
Roof Struct:	03	Gable
Roof Cover:	12	Arch Shingles
Int Wall A:	05	Drywall
Int Wall B:		
Int Floor A:	14	Carpet
Int Floor B:		
Heating Fuel:	03	Gas
Heating Type:	05	Hot Water
AC Type:	100	
% Sprinkler:	0	
Bldg Use:	210	Apartments
Heat/AC:	00	None
Frame Type:	02	Wood Frame
Baths/Plumbing	02	Average
Ceiling/Walls:	06	Ceil & Wall
Rooms/Prtns:	02	Average
Wall Height:	8.00	
% Comn Wall:		
1st Floor Use:		

CONSTRUCTION DETAIL (CONTINUED)

Element	Cd	Description

MIXED USE

Code	Description	Percentage
210	Apartments	100
		0
		0

COST / MARKET VALUATION

RCN	1,290,521
Year Built	1973
Effective Year Built	
Depreciation Code	G
Remodel Rating	
Year Remodeled	
Depreciation %	35
Functional Obsol	
External Obsol	20
Trend Factor	1
Condition	
Condition %	
Percent Good	45
Cns Sect Rcnld	580,700
Dep % Ovr	
Dep Ovr Comment	
Misc Imp Ovr	
Misc Imp Ovr Comment	
Cost to Cure Ovr	
Cost to Cure Ovr Comment	

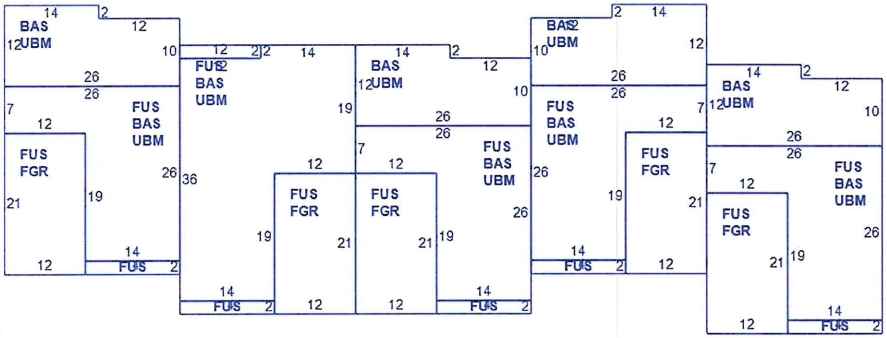

OB - OUTBUILDING & YARD ITEMS(L) / XF - BUILDING EXTRA FEATURES(B)

Code	Descripti	Sub	Sub Ty	L/B	Units	Unit Price	Yr Blt	Cond. Cd	% Gd	Grade	Grade Ad	Appr. V

BUILDING SUB-AREA SUMMARY SECTION

Code	Description	Living Area	Floor Area	Eff Area	Unit Cost	Undeprec Value
BAS	First Floor	3,680	3,680	3,680	0	
FGR	Garage	0	1,260	504	0	
FUS	Finished Upper Story	3,952	3,952	3,952	0	
UBM	Basement	0	3,680	736	0	
	Ttl Gross Liv / Lease Area	7,632	12,572	8,872		

Property Location 10 EAST WINTONBURY AVE | Map ID O12/ / 59/ / | Bldg Name | State Use 210
Vision ID 2020 | Account # R02072 | Bldg # 17 | Sec # 1 of 1 | Card # 17 of 19 | Print Date 12/17/2025 12:18:15

CURRENT OWNER

WINTONBURY OWNERS LLC
C/O PAREDIM PARTNERS LLC
45 KNOLLWOOD ROAD STE 305
ELMSFORD NY 10523

TOPO / UTILITIES / STRT / ROAD / LOCATION

SUPPLEMENTAL DATA

Alt Prcl ID	179-1 1-6	Reval Data	
Census:	4715	Callback Lt	
Foundation	POURED CONC.	Permit Dat	
Fire Dist:	B		
Condo Mdl			
Unsold Co			
GIS ID	2020	Assoc Pid#	

CURRENT ASSESSMENT

Description	Code	Appraised	Assessed
Comm Land	2-1	5,550,000	3,885,000
Apartment	2-3	12,692,100	8,884,470
Comm OB	2-5	187,200	131,040
Total		18,429,300	12,900,510

6011
BLOOMFIELD, CT

VISION

RECORD OF OWNERSHIP

	BK-VOL/PAGE		SALE DATE	Q/U	V/I	SALE PRICE	VC
WINTONBURY OWNERS LLC	1153	0349	05-28-2004	U	I	7,650,000	34

PREVIOUS ASSESSMENTS (HISTORY)

Year	Code	Assessed	Year	Code	Assessed	Year	Code	Assessed
2024	2-1	3,885,000	2024	2-1	3,885,000	2023	2-1	2,913,750
	2-3	8,884,470		2-3	8,884,470		2-3	6,041,350
	2-5	117,180		2-5	117,180		2-5	86,170
	Total	12,886,650		Total	12,886,650		Total	9,041,270

EXEMPTIONS

Year	Code	Description	Amount
		Total	0.00

OTHER ASSESSMENTS

Code	Description	Number	Amount	Comm Int

This signature acknowledges a visit by a Data Collector or Assessor

ASSESSING NEIGHBORHOOD

Nbhd	Sub	Nbhd Name	B	Tracing	Batch
0001	A				

NOTES

2019 - UNITS 57,59,61,63 & 65
WALL A/C
BLDG 17: (4) 2 BD 1.5 BTH
(1) 3 BD 1.5 BTH

R04126P

APPRAISED VALUE SUMMARY

Appraised Bldg. Value (Card)	12,692,100
Appraised Xf (B) Value (Bldg)	0
Appraised Ob (B) Value (Bldg)	187,200
Appraised Land Value (Bldg)	5,550,000
Special Land Value	0
Total Appraised Parcel Value	18,429,300
Valuation Method	C
Total Appraised Parcel Value	18,429,300

BUILDING PERMIT RECORD

Permit Id	Issue Date	Type	Description	Amount	Insp Date	% Comp	Date Comp	Comments

VISIT / CHANGE HISTORY

Date	Id	Type	Is	Cd	Purpost/Result

LAND LINE VALUATION SECTION

B	Use Code	Description	Zone	Land Type	Land Units		Unit Price	I. Factor	Site Index	Cond.	Nbhd.	Nhbd Adj	Notes	Location Adjustment		Adj Unit Pric	Land Value
17	210	Apartments	R-15		0.000	AC	0.00	1.00000	0	1.00		1.000			0		0
				Total Card Land Units	0.00	AC	Parcel Total Land Area:			14.90						Total Land Value	5,550,000

Property Location 10 EAST WINTONBURY AVE | Map ID O12/ / 59/ / | Bldg Name | State Use 210
Vision ID 2020 | Account # R02072 | Bldg # 17 | Sec # 1 of 1 | Card # 17 of 19 | Print Date 12/17/2025 12:18:15

CONSTRUCTION DETAIL

Element	Cd	Description
Style:	60	Apartments-Garden
Model	94	Commercial
Grade:	08	C
Stories:	2	2 Stories
Occupancy:	5.00	
Ext Wall A:	25	Vinyl Siding
Ext Wall B:		
Roof Struct:	03	Gable
Roof Cover:	03	Asphalt Shingl
Int Wall A:	05	Drywall
Int Wall B:		
Int Floor A:	14	Carpet
Int Floor B:		
Heating Fuel:	03	Gas
Heating Type:	05	Hot Water
AC Type:	100	
% Sprinkler:	0	
Bldg Use:	210	Apartments
Heat/AC:	00	None
Frame Type:	02	Wood Frame
Baths/Plumbing	02	Average
Ceiling/Walls:	06	Ceil & Wall
Rooms/Prtns:	02	Average
Wall Height:	8.00	
% Comn Wall:		
1st Floor Use:		

CONSTRUCTION DETAIL (CONTINUED)

Element	Cd	Description

MIXED USE

Code	Description	Percentage
210	Apartments	100
		0
		0

COST / MARKET VALUATION

RCN	1,290,521
Year Built	1973
Effective Year Built	
Depreciation Code	G
Remodel Rating	
Year Remodeled	
Depreciation %	35
Functional Obsol	
External Obsol	20
Trend Factor	1
Condition	
Condition %	
Percent Good	45
Cns Sect Rcnld	580,700
Dep % Ovr	
Dep Ovr Comment	
Misc Imp Ovr	
Misc Imp Ovr Comment	
Cost to Cure Ovr	
Cost to Cure Ovr Comment	

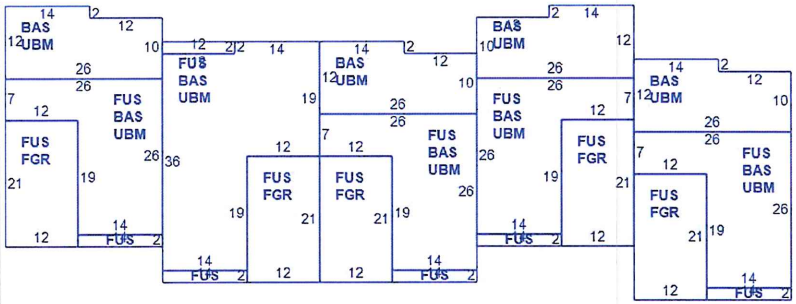

OB - OUTBUILDING & YARD ITEMS(L) / XF - BUILDING EXTRA FEATURES(B)

Code	Descripti	Sub	Sub Ty	L/B	Units	Unit Price	Yr Blt	Cond. Cd	% Gd	Grade	Grade Ad	Appr. V

BUILDING SUB-AREA SUMMARY SECTION

Code	Description	Living Area	Floor Area	Eff Area	Unit Cost	Undeprec Value
BAS	First Floor	3,680	3,680	3,680	0	
FGR	Garage	0	1,260	504	0	
FUS	Finished Upper Story	3,952	3,952	3,952	0	
UBM	Basement	0	3,680	736	0	
	Ttl Gross Liv / Lease Area	7,632	12,572	8,872		

Property Location 10 EAST WINTONBURY AVE | Map ID O12/ / 59/ / | Bldg Name | State Use 210
Vision ID 2020 | Account # R02072 | Bldg # 18 | Sec # 1 of 1 | Card # 18 of 19 | Print Date 12/17/2025 12:18:15

CURRENT OWNER

WINTONBURY OWNERS LLC
C/O PAREDIM PARTNERS LLC
45 KNOLLWOOD ROAD STE 305
ELMSFORD NY 10523

TOPO	UTILITIES	STRT / ROAD	LOCATION

SUPPLEMENTAL DATA

Alt Prcl ID	179-1 1-6	Reval Data	
Census:	4715	Callback Lt	
Foundation	POURED CONC.	Permit Dat	
Fire Dist:	B		
Condo Mdl			
Unsold Co			
GIS ID	2020	Assoc Pid#	

CURRENT ASSESSMENT

Description	Code	Appraised	Assessed
Comm Land	2-1	5,550,000	3,885,000
Apartment	2-3	12,692,100	8,884,470
Comm OB	2-5	187,200	131,040
Total		18,429,300	12,900,510

6011
BLOOMFIELD, CT

VISION

RECORD OF OWNERSHIP

	BK-VOL/PAGE		SALE DATE	Q/U	V/I	SALE PRICE	VC
WINTONBURY OWNERS LLC	1153	0349	05-28-2004	U	I	7,650,000	34

PREVIOUS ASSESSMENTS (HISTORY)

Year	Code	Assessed	Year	Code	Assessed	Year	Code	Assessed
2024	2-1	3,885,000	2024	2-1	3,885,000	2023	2-1	2,913,750
	2-3	8,884,470		2-3	8,884,470		2-3	6,041,350
	2-5	117,180		2-5	117,180		2-5	86,170
	Total	12,886,650		Total	12,886,650		Total	9,041,270

EXEMPTIONS

Year	Code	Description	Amount
		Total	0.00

OTHER ASSESSMENTS

Code	Description	Number	Amount	Comm Int

This signature acknowledges a visit by a Data Collector or Assessor

ASSESSING NEIGHBORHOOD

Nbhd	Sub	Nbhd Name	B	Tracing	Batch
0001	A				

NOTES

2019 - UNIS 113,115,117,119,123, & 125
WALL UNIT A/C - NEW ROOF 2017
UEP - STAIRS TO UBM
BLDG 18: (5) 2 BD 1.5 BTH
(2) 3 BD 1.5 BTH R04126Q

APPRAISED VALUE SUMMARY

Appraised Bldg. Value (Card)	12,692,100
Appraised Xf (B) Value (Bldg)	0
Appraised Ob (B) Value (Bldg)	187,200
Appraised Land Value (Bldg)	5,550,000
Special Land Value	0
Total Appraised Parcel Value	18,429,300
Valuation Method	C
Total Appraised Parcel Value	18,429,300

BUILDING PERMIT RECORD

Permit Id	Issue Date	Type	Description	Amount	Insp Date	% Comp	Date Comp	Comments

VISIT / CHANGE HISTORY

Date	Id	Type	Is	Cd	Purpost/Result

LAND LINE VALUATION SECTION

B	Use Code	Description	Zone	Land Type	Land Units		Unit Price	I. Factor	Site Index	Cond.	Nbhd.	Nhbd Adj	Notes	Location Adjustment		Adj Unit Pric	Land Value
18	210	Apartments	R-15		0.000	AC	0.00	1.00000	0	1.00		1.000			0		0
				Total Card Land Units	0.00	AC	Parcel Total Land Area:			14.90						Total Land Value	5,550,000

Property Location 10 EAST WINTONBURY AVE | Map ID O12/ / 59/ / | Bldg Name | State Use 210
Vision ID 2020 | Account # R02072 | Bldg # 18 | Sec # 1 of 1 | Card # 18 of 19 | Print Date 12/17/2025 12:18:16

CONSTRUCTION DETAIL

Element	Cd	Description
Style:	60	Apartments-Garden
Model	94	Commercial
Grade:	08	C
Stories:	2	2 Stories
Occupancy:	7.00	
Ext Wall A:	25	Vinyl Siding
Ext Wall B:		
Roof Struct:	03	Gable
Roof Cover:	12	Arch Shingles
Int Wall A:	05	Drywall
Int Wall B:		
Int Floor A:	14	Carpet
Int Floor B:		
Heating Fuel:	03	Gas
Heating Type:	05	Hot Water
AC Type:	100	
% Sprinkler:	0	
Bldg Use:	210	Apartments
Heat/AC:	00	None
Frame Type:	02	Wood Frame
Baths/Plumbing	02	Average
Ceiling/Walls:	06	Ceil & Wall
Rooms/Prtns:	02	Average
Wall Height:	8.00	
% Comn Wall:		
1st Floor Use:		

CONSTRUCTION DETAIL (CONTINUED)

Element	Cd	Description

MIXED USE

Code	Description	Percentage
210	Apartments	100
		0
		0

COST / MARKET VALUATION

RCN	1,742,940
Year Built	1973
Effective Year Built	
Depreciation Code	G
Remodel Rating	
Year Remodeled	
Depreciation %	35
Functional Obsol	
External Obsol	20
Trend Factor	1
Condition	
Condition %	
Percent Good	45
Cns Sect Rcnld	784,300
Dep % Ovr	
Dep Ovr Comment	
Misc Imp Ovr	
Misc Imp Ovr Comment	
Cost to Cure Ovr	
Cost to Cure Ovr Comment	

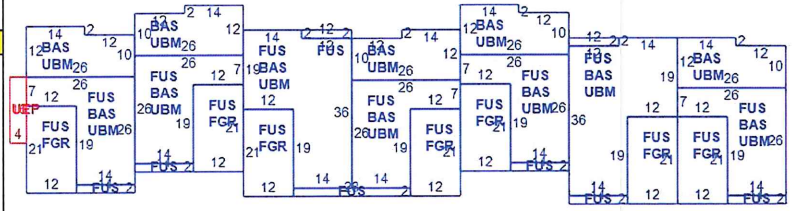

OB - OUTBUILDING & YARD ITEMS(L) / XF - BUILDING EXTRA FEATURES(B)

Code	Descripti	Sub	Sub Ty	L/B	Units	Unit Price	Yr Blt	Cond. Cd	% Gd	Grade	Grade Ad	Appr. V

BUILDING SUB-AREA SUMMARY SECTION

Code	Description	Living Area	Floor Area	Eff Area	Unit Cost	Undeprec Value
BAS	First Floor	5,152	5,152	5,152	0	
FGR	Garage	0	1,764	706	0	
FUS	Finished Upper Story	5,720	5,720	5,720	0	
UBM	Basement	0	5,152	1,030	0	
UEP	Unfinished Enclosed Porch	0	64	22	0	
	Ttl Gross Liv / Lease Area	10,872	17,852	12,630		

Property Location 10 EAST WINTONBURY AVE | Map ID O12/ / 59/ / | Bldg Name | State Use 210
Vision ID 2020 | Account # R02072 | Bldg # 19 | Sec # 1 of 1 | Card # 19 of 19 | Print Date 12/17/2025 12:18:16

CURRENT OWNER

WINTONBURY OWNERS LLC
C/O PAREDIM PARTNERS LLC
45 KNOLLWOOD ROAD STE 305
ELMSFORD NY 10523

TOPO / UTILITIES / STRT / ROAD / LOCATION

SUPPLEMENTAL DATA

Alt Prcl ID	179-1 1-6	Reval Data	
Census:	4715	Callback Lt	
Foundation	POURED CONC.	Permit Dat	
Fire Dist:	B		
Condo Mdl			
Unsold Co			
GIS ID	2020	Assoc Pid#	

CURRENT ASSESSMENT

Description	Code	Appraised	Assessed
Comm Land	2-1	5,550,000	3,885,000
Apartment	2-3	12,692,100	8,884,470
Comm OB	2-5	187,200	131,040
Total		18,429,300	12,900,510

6011

BLOOMFIELD, CT

VISION

RECORD OF OWNERSHIP

	BK-VOL/PAGE		SALE DATE	Q/U	V/I	SALE PRICE	VC
WINTONBURY OWNERS LLC	1153	0349	05-28-2004	U	I	7,650,000	34

PREVIOUS ASSESSMENTS (HISTORY)

Year	Code	Assessed	Year	Code	Assessed	Year	Code	Assessed
2024	2-1	3,885,000	2024	2-1	3,885,000	2023	2-1	2,913,750
	2-3	8,884,470		2-3	8,884,470		2-3	6,041,350
	2-5	117,180		2-5	117,180		2-5	86,170
	Total	12,886,650		Total	12,886,650		Total	9,041,270

EXEMPTIONS

Year	Code	Description	Amount
		Total	0.00

OTHER ASSESSMENTS

Code	Description	Number	Amount	Comm Int

This signature acknowledges a visit by a Data Collector or Assessor

ASSESSING NEIGHBORHOOD

Nbhd	Sub	Nbhd Name	B	Tracing	Batch
0001	A				

NOTES

2019 - UNITS 127,129,131,133 & 135
WALL A/C - NEW ROOF 2017
BLDG 19: (4) 2 BD 1.5 BTH
(1) 3 BD 1.5 BTH

R04126R

APPRAISED VALUE SUMMARY

Appraised Bldg. Value (Card)	12,692,100
Appraised Xf (B) Value (Bldg)	0
Appraised Ob (B) Value (Bldg)	187,200
Appraised Land Value (Bldg)	5,550,000
Special Land Value	0
Total Appraised Parcel Value	18,429,300
Valuation Method	C
Total Appraised Parcel Value	18,429,300

BUILDING PERMIT RECORD

Permit Id	Issue Date	Type	Description	Amount	Insp Date	% Comp	Date Comp	Comments

VISIT / CHANGE HISTORY

Date	Id	Type	Is	Cd	Purpost/Result
12-09-2019	JW			41	Reval Hearing Change

LAND LINE VALUATION SECTION

B	Use Code	Description	Zone	Land Type	Land Units		Unit Price	I. Factor	Site Index	Cond.	Nbhd.	Nhbd Adj	Notes	Location Adjustment		Adj Unit Pric	Land Value
19	210	Apartments	R-15		0.000	AC	0.00	1.00000	0	1.00		1.000			0		0
19	210	Apartments			14.900	AC	0.00	1.00000	0	1.00		1.000			0		0
				Total Card Land Units	14.90	AC	Parcel Total Land Area:			14.90						Total Land Value	5,550,000

Property Location 10 EAST WINTONBURY AVE | Map ID O12/ / 59/ / | Bldg Name | State Use 210
Vision ID 2020 | Account # R02072 | Bldg # 19 | Sec # 1 of 1 | Card # 19 of 19 | Print Date 12/17/2025 12:18:16

CONSTRUCTION DETAIL

Element	Cd	Description
Style:	60	Apartments-Garden
Model	94	Commercial
Grade:	08	C
Stories:	2	2 Stories
Occupancy:	5.00	
Ext Wall A:	25	Vinyl Siding
Ext Wall B:		
Roof Struct:	03	Gable
Roof Cover:	12	Arch Shingles
Int Wall A:	05	Drywall
Int Wall B:		
Int Floor A:	14	Carpet
Int Floor B:		
Heating Fuel:	03	Gas
Heating Type:	05	Hot Water
AC Type:	100	
% Sprinkler:	0	
Bldg Use:	210	Apartments
Heat/AC:	00	None
Frame Type:	02	Wood Frame
Baths/Plumbing	02	Average
Ceiling/Walls:	06	Ceil & Wall
Rooms/Prtns:	02	Average
Wall Height:	8.00	
% Comn Wall:		
1st Floor Use:		

CONSTRUCTION DETAIL (CONTINUED)

Element	Cd	Description

MIXED USE

Code	Description	Percentage
210	Apartments	100
		0
		0

COST / MARKET VALUATION

RCN	1,290,521
Year Built	1973
Effective Year Built	
Depreciation Code	G
Remodel Rating	
Year Remodeled	
Depreciation %	35
Functional Obsol	
External Obsol	20
Trend Factor	1
Condition	
Condition %	
Percent Good	45
Cns Sect Rcnld	580,700
Dep % Ovr	
Dep Ovr Comment	
Misc Imp Ovr	
Misc Imp Ovr Comment	
Cost to Cure Ovr	
Cost to Cure Ovr Comment	

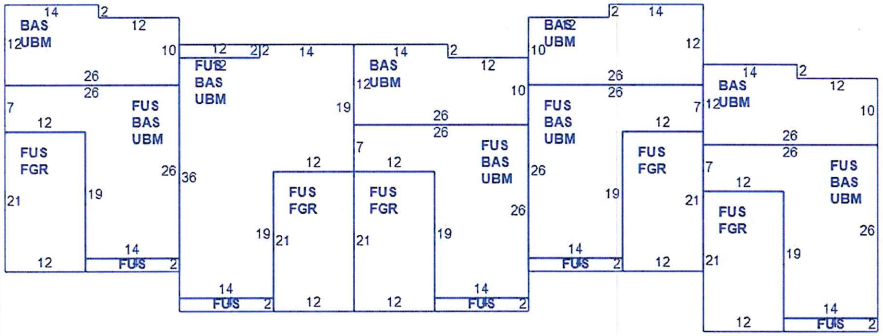

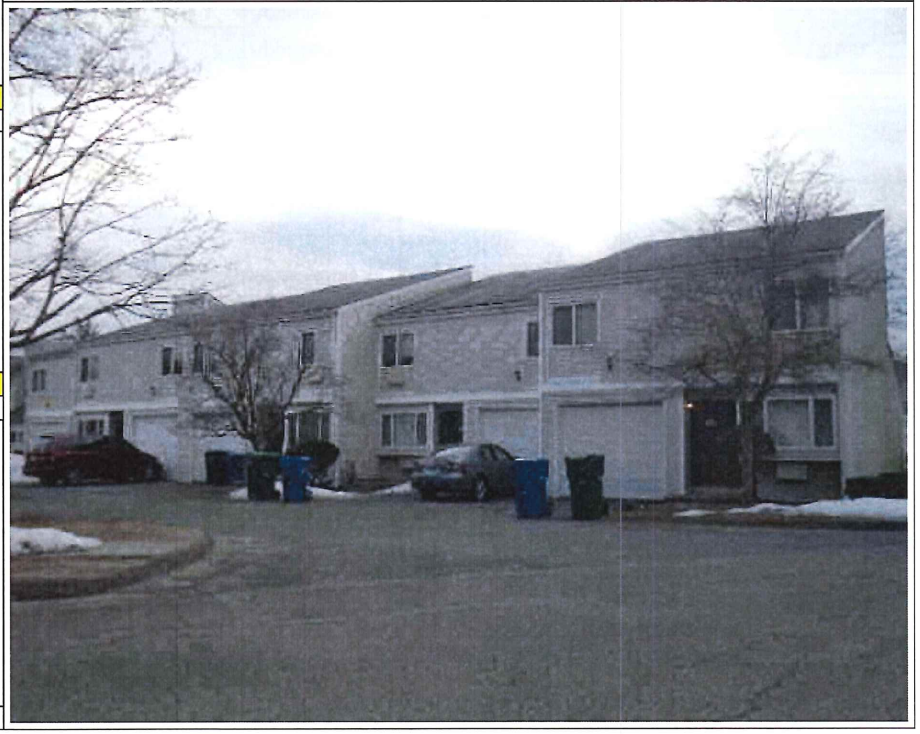

OB - OUTBUILDING & YARD ITEMS(L) / XF - BUILDING EXTRA FEATURES(B)

Code	Descripti	Sub	Sub Ty	L/B	Units	Unit Price	Yr Blt	Cond. Cd	% Gd	Grade	Grade Ad	Appr. V

BUILDING SUB-AREA SUMMARY SECTION

Code	Description	Living Area	Floor Area	Eff Area	Unit Cost	Undeprec Value
BAS	First Floor	3,680	3,680	3,680	0	
FGR	Garage	0	1,260	504	0	
FUS	Finished Upper Story	3,952	3,952	3,952	0	
UBM	Basement	0	3,680	736	0	
	Ttl Gross Liv / Lease Area	7,632	12,572	8,872		